BRISTOL COMPRESSORS™

Product Information & Specifications

宁波裕月科技有限公司

NINGBO YUYUE TECHNICAL SCIENCE DEVELOPMENT CO., LTD

Web:https://refricompressor.com/

Table of Contents

COMPRESSOR MODEL NUMBER SYSTEM....5
H20J....6
H21J....10
H22J....14
H82J....18
H71J....26
H22A....28
H23A, H29A....30
H73A....34
H79A....36
H2EB, H22B....38
H29B....40
H79B....44
H82B....46
H89B....48
H22G....50
H2NG....54
H75G....58
H7BG....60
H7NG....62
H2DA....64
H7DA....66

H81J, H83B and V80J refer to Bristol Web site www.BristolCompressors.com

REFRIGERATION

Diagrams....68
L61J, L63A, L63B, L64A....72
M63A, M63B....74
R92J(R404A)....76
R92J(R407C)....80

OBSOLETED MODELS

Obsoleted model number only refer to Bristol Compressors web site for technical data....82

KICKSTART Aftermarket Start Assist....88

NOTE:

PLEASE REFER TO THIS COMPRESSOR MODEL NUMBER SYSTEM FOR CONVENIENT CROSS REFERENCE

COMPRESSOR MODEL NUMBER SYSTEM

H 8 2 J 1 9 3 A B C A

Mounting Feet Dimension (Inches)....A = 7.5 x 7.5
B = 4.8 x 8.0
C = 8.44 x 9.75
D = 6.12 x 8.0

E = 9.5 x 9.5
F = 10.5 x 10.5
H = 7.5 x 21.5
J = 7.5 x 22.5

K = 7.5 x 17
L = Offset Mounting Rail
R = Horizontal/Vertical Mount
X = 8.8 x 6.1

Y = 7.5 x 7.75

Electrical Characteristics.....A = 115-1-60
B = 230-1-60
C = 230/208-1-60
D = 230/208-3-60 (220/200-3-50)
E = 460-3-60 (380/415-3-50)
F = 575-3-60 (500-3-50)
G = 230-1-50
H = 265-1-60 (220/240-1-50)

J = 230/208-1-50
K = 220/240-1-50
L = 230/200-3-60 (220/200-3-50)
M = 220/200-3-50
N = 400-3-50
P = 200/240-1-50
T = 208-1-60
U = 220/380-3-60

V = 460/380-3-60 (380/415-3-50)
W = 380/460-3-60
X = 380-3-60
Y = 230/208-3-60
Z = 380/415-3-50
2 = 180-3-120

Motor Protector.....B = Internal Line Break
P = Pilot Duty - Solid State

R = Pilot Duty - Solid State (2nd Generation)
T = Pilot Duty - Internal Thermostat and External Sensing Elements

Motor Type.....A = PSC Permanent Split Capacitor
B = CSR Capacitor Start/Cap. Run
C = RSCR Resistance Start/Cap. Run
D = AL 3 Phase-Across the Line
E = CSIR Cap. Start/Induction Run

F = PWS 3 Phase-Part Winding Start
G = 3 Phase 2/4 Pole (2 Speed)
J = 1 Phase 2/4 Pole (2 Speed)
K = 3 Phase Dual Voltage
L = 3 Phase - WYE DELTA

M = 3 Phase Variable Speed Permanent Magnet
P = 3 Phase ALS Synchronous Speed Permanent Magnet Motor

Nominal Capacity (BTU/Hr).....193 = 19+000 or 19,000 BTU/Hr; 244 = 24+0,000 or 240,000 BTU/Hr
19B = 19+000 Internal blend applied for equalized start
Note: A letter (B, E, M, Q, S or U) in the third position also indicates k+000

Family.....A = Model A Reciprocating
B = Model B Reciprocating
C = Borell (<42k)
D = Dual Compressor Application

G = Model G Reciprocating
J = Benchmark Model Reciprocating
R = Borell (>42k)

Generation.....B = Second Generation - No PRV (Except G Series)
D = Dual Compressor Application (Single and Interconnected)
E = High Efficiency
M = Alternate Pressure Relief Valve
N = No Pressure Relief Valve (Except G Series)
O = Basic Standard Model
P = Basic Standard Model - Upgrade Plus
1 = Second Generation - Basic Standard Model

2 = Third Generation - Basic Standard Model
3 = Fourth Generation - Basic Standard Model
4 = Basic Standard Model - Improved Sound
5 = Inertia Series - Standard Model
6 = Inertia Series - High Efficiency Model
7 = Inertia Series - Second Generation High Efficiency Model
8 = Fifth Generation - Basic Standard Model Upgrade
9 = Sixth Generation - Basic Standard Model Upgrade

Type of Refrigerant.....1 = RT2*
2 = RZ2
3 = RT34a

5 = R502 or Alternate Replacement Refrigerant R402B
6 = R404A

7 = R407C*
8 = R410A
9 = R407C, R22 (High Temp), R404A (Medium Temp)*

*Compressors in this series may be applied with additional refrigerants. Please contact your Bristol Compressor account representative for details.

Refrigeration Application.....H = High Temperature
L = Low Temperature
M = Medium Temperature

R = Designed for Use with Multiple Refrigerants
T = High Temperature (2 Capacities/2 or 4 Cylinders) - Twin/Single
V = Variable Speed

H20J153ABC	208-230/1/60	15100	4424	1400	10.8	3.2	21300	1160	18.4	6.2	41	9.6	1.824	29.88
H20J173ABC	208-230/1/60	16900	4952	1570	10.7	3.1	23600	1290	18.3	7.1	44	12	2.040	33.42
H20J193ABC	208-230/1/60	18800	5508	1760	10.7	3.1	26500	1440	18.4	7.6	44	12.5	2.247	36.82
H20J213ABC	208-230/1/60	21100	6182	1950	10.8	3.2	28400	1550	18.3	8.8	55	15.6	2.463	40.35
H20J223ABC	208-230/1/60	22200	6505	2000	11.1	3.3	29900	1620	18.4	8.8	55	15.3	2.463	40.35
H20J253ABC	208-230/1/60	24200	7091	2190	11.1	3.3	32000	1720	18.6	9.8	60	17.3	2.708	44.37
H20J273ABC	208-230/1/60	26300	7705	2390	11.0	3.2	35630	1880	18.9	11	68	17.5	2.915	47.76
H20J293ABC	208-230/1/60	29200	8556	2620	11.1	3.3	38400	2080	18.5	11.5	68	17.5	3.129	51.27
H20J293DBF	575/3/60	29200	8556	2620	11.1	3.3	38400	2080	18.5	3.2	26	5.2	3.129	51.27
H20J293DBL	200-220/3/50	25000	7325	2270	11.0	3.2	32600	1800	18.2	8.6	71	12.5	3.129	51.27
H20J293DBL	200-230/3/60	29200	8556	2620	11.1	3.3	38400	2080	18.5	8.2	68	13	3.129	51.27
H20J293DBV	380-415/3/50	25000	7325	2270	11.0	3.2	32600	1800	18.2	4.2	32	6.6	3.129	51.27
H20J293DBV	380-460/3/60	29200	8556	2620	11.1	3.3	38400	2080	18.5	4	32	7	3.129	51.27
H20J303ABC	208-230/1/60	29700	8702	2610	11.4	3.3	38200	2060	18.6	12	74	21	3.056	50.07
H20J313ABC	208-230/1/60	30300	8878	2670	11.3	3.3	40300	2110	19.1	11.9	78	20	3.242	53.12
H20J323ABC	208-230/1/60	32100	9405	2800	11.5	3.4	42800	2240	19.1	12.7	78	22	3.380	55.38
H20J323DBF	575/3/60	32000	9376	2780	11.5	3.4	42400	2210	19.2	3.7	36	7	3.380	55.38
H20J323DBL	200-220/3/50	27400	8028	2440	11.3	3.3	35400	1880	18.8	8.8	76	14	3.380	55.38
H20J323DBL	200-230/3/60	32000	9376	2780	11.5	3.4	42400	2210	19.2	8.5	72	14	3.380	55.38
H20J323DBV	380-415/3/50	27400	8028	2440	11.3	3.3	35400	1880	18.8	4.7	45	9	3.380	55.38
H20J323DBV	380-460/3/60	32000	9376	2780	11.5	3.4	42400	2210	19.2	4.7	45	9	3.380	55.38
H20J353ABC	208-230/1/60	34500	10109	3000	11.5	3.4	45100	2360	19.1	13.1	78	21	3.607	59.10
H20J353DBF	575/3/60	34500	10109	3000	11.5	3.4	45100	2360	19.1	3.9	36	6.1	3.607	59.10
H20J353DBL	200-220/3/50	29900	8761	2600	11.5	3.4	39000	2050	19.1	9.2	76	13.4	3.870	63.41
H20J353DBL	200-230/3/60	34500	10109	3000	11.5	3.4	45100	2360	19.1	9.2	72	13.6	3.870	63.41
H20J353DBV	380-415/3/50	29200	8556	2550	11.5	3.4	38100	2010	19.0	5	47	8	3.607	59.10
H20J353DBV	380-460/3/60	34500	10109	3000	11.5	3.4	45100	2360	19.0	5	45	7.7	3.607	59.10
H20J383ABC	208-230/1/60	37800	11075	3370	11.2	3.3	48900	2570	19.0	14.9	86	24	4.021	65.88
H20J383DBF	575/3/60	37500	10988	3300	11.4	3.3	48800	2590	18.9	4	36	8	3.870	63.41
H20J383DBL	200-220/3/50	31900	9347	2860	11.1	3.3	41200	2220	18.6	11.1	90	17	3.870	63.41
H20J383DBL	200-230/3/60	37500	10988	3300	11.4	3.3	48800	2590	18.9	10.2	88	18	3.870	63.41
H20J383DBV	380-415/3/50	31900	9347	2860	11.1	3.3	41200	2220	18.6	5.2	42	9	3.870	63.41
H20J383DBV	380-460/3/60	37500	10988	3300	11.4	3.3	48800	2590	18.9	5	42	9	3.870	63.41
H20J403ABC	208-230/1/60	40900	11984	3620	11.3	3.3	52800	2860	18.4	17.1	102	28	4.147	67.95
H20J403DBE	380-415/3/50	34900	10226	3120	11.2	3.3	44300	2400	18.5	5.6	42	9	4.147	67.95
H20J403DBE	460/3/60	40400	11837	3490	11.6	3.4	52300	2760	18.9	5.4	42	9	4.147	67.95
H20J403DBF	575/3/60	40400	11837	3490	11.6	3.4	52300	2760	18.9	4.3	36	8	4.147	67.95
H20J403DBL	200-220/3/50	34900	10226	3120	11.2	3.3	44300	2400	18.5	11.6	90	19	4.147	67.95
H20J403DBL	200-230/3/60	40500	11867	3530	11.5	3.4	52500	2790	18.8	11	88	20	4.147	67.95
H20J423ABC	208-230/1/60	42100	12335	3740	11.3	3.3	53600	2910	18.4	17	102	27	4.235	69.39
H20J423DBD	200-220/3/50	35200	10314	3150	11.2	3.3	45400	2430	18.7	11.7	90	18	4.235	69.39
H20J423DBD	208-230/3/60	41600	12189	3680	11.3	3.3	53900	2890	18.7	11.2	88	18	4.235	69.39

Data Subject to Revision

H20J153ABC	35	1.0	59.0	26.8	62.0	28.1	30/370	145-175/250	GE 3ARR3*3V	11.24	285.50	13.25	336.55	13.53	343.66
H20J173ABC	35	1.0	58.5	26.5	62.0	28.1	30/370	145-175/250	()	11.24	285.50	13.25	336.55	13.53	343.66
H20J193ABC	35	1.0	58.5	26.5	62.0	28.1	35/370	145-175/250	()	11.24	285.50	13.25	336.55	13.53	343.66
H20J213ABC	35	1.0	60.5	27.4	64.0	29.0	30/370	145-175/250	GE 3ARR3*3U	11.24	285.50	13.25	336.55	13.53	343.66
H20J223ABC	35	1.0	65.5	29.7	69.0	31.3	35/370	145-175/250	GE 3ARR3*3S*	11.24	285.50	13.25	336.55	13.53	343.66
H20J253ABC	30	0.9	59.0	26.8	62.5	28.3	35/370	145-175/330	3ARR3*3N*	11.73	297.94	13.75	349.25	14.03	356.36
H20J273ABC	40	1.1	74.0	33.6	77.0	34.9	30/440	189-227/250	3ARR3*10U*	13.20	335.28	14.75	375.92	15.03	381.76
H20J293ABC	40	1.1	74.0	33.6	77.0	34.9	35/440	189-227/250	3ARR3*10U*	14.42	366.32	14.75	374.65	15.03	381.76
H20J293DBF	40	1.1	68.5	31.1	71.5	32.4	N/A	N/A	N/A	13.22	335.76	14.75	374.65	15.03	381.76
H20J293DBL	40	1.1	68.5	31.1	71.5	32.4	N/A	N/A	N/A	13.22	335.76	14.75	374.65	15.03	381.76
H20J293DBL	40	1.1	68.5	31.1	71.5	32.4	N/A	N/A	N/A	13.22	335.76	14.75	374.65	15.03	381.76
H20J293DBV	40	1.1	68.5	31.1	71.5	32.4	N/A	N/A	N/A	13.22	335.76	14.75	374.65	15.03	381.76
H20J293DBV	40	1.1	68.5	31.1	71.5	32.4	N/A	N/A	N/A	13.22	335.76	14.75	374.65	15.03	381.76
H20J303ABC	35	1.0	67.0	30.4	70.5	32.0	40/370	189-227/250	3ARR3*3L*	12.24	310.90	14.25	361.95	14.53	369.06
H20J313ABC	40	1.1	79.0	35.8	82.0	37.2	40/370	189-227/330	3ARR3*3S*	14.92	378.97	15.25	387.35	15.53	394.46
H20J323ABC	40	1.1	79.0	35.8	82.0	37.2	40/370	189-227/330	3ARR3*3S*	14.92	378.97	15.25	387.35	15.53	394.46
H20J323DBF	40	1.1	75.0	34.0	78.0	35.4	N/A	N/A	N/A	13.72	348.46	15.25	387.35	15.53	394.46
H20J323DBL	40	1.1	75.0	34.0	78.0	35.4	N/A	N/A	N/A	13.72	348.49	15.25	387.35	15.53	394.46
H20J323DBL	40	1.1	75.0	34.0	78.0	35.4	N/A	N/A	N/A	13.72	348.49	15.25	387.35	15.53	394.46
H20J323DBV	40	1.1	75.0	34.0	78.0	35.4	N/A	N/A	N/A	13.72	348.49	15.25	387.35	15.53	394.46
H20J323DBV	40	1.1	75.0	34.0	78.0	35.4	N/A	N/A	N/A	13.72	348.49	15.25	387.35	15.53	394.46
H20J353ABC	40	1.1	79.0	35.8	82.0	37.2	45/370	189-227/330	GE 3ARR3*3S*	14.92	378.97	15.25	387.35	15.53	394.46
H20J353DBF	40	1.1	75.0	34.0	78.0	35.4	N/A	N/A	N/A	13.72	348.49	15.25	387.35	15.53	394.46
H20J353DBL	40	1.1	72.5	32.9	75.5	34.2	N/A	N/A	N/A	13.72	348.49	15.25	387.35	15.53	394.46
H20J353DBL	40	1.1	72.5	32.9	75.5	34.2	N/A	N/A	N/A	13.72	348.49	15.25	387.35	15.53	394.46
H20J353DBV	40	1.1	72.5	32.9	75.5	34.2	N/A	N/A	N/A	13.72	348.49	15.25	387.35	15.53	394.46
H20J353DBV	40	1.1	72.5	32.9	75.5	34.2	N/A	N/A	N/A	13.72	348.49	15.25	387.35	15.53	394.46
H20J383ABC	40	1.1	81.0	36.7	84.0	38.1	45/370	189-227/250	3ARR3*3S*	15.17	385.32	15.50	393.70	15.78	400.81
H20J383DBF	40	1.1	77.0	34.9	80.0	36.3	N/A	N/A	N/A	13.97	354.84	15.50	393.70	15.78	400.81
H20J383DBL	40	1.1	77.0	34.9	80.0	36.3	N/A	N/A	N/A	13.97	354.84	15.50	393.70	15.78	400.81
H20J383DBL	40	1.1	77.0	34.9	80.0	36.3	N/A	N/A	N/A	13.97	354.84	15.50	393.70	15.78	400.81
H20J383DBV	40	1.1	77.0	34.9	80.0	36.3	N/A	N/A	N/A	13.97	354.84	15.50	393.70	15.78	400.81
H20J383DBV	40	1.1	77.0	34.9	80.0	36.3	N/A	N/A	N/A	13.97	354.84	15.50	393.70	15.78	400.81
H20J403ABC	40	1.1	81.0	36.7	84.0	38.1	50/370	216-259/330	3ARR3*3S*	15.17	385.32	15.50	393.70	15.78	400.81
H20J403DBE	40	1.1	77.0	34.9	80.0	36.3	N/A	N/A	N/A	13.97	354.84	15.50	393.70	15.78	400.81
H20J403DBE	40	1.1	77.0	34.9	80.0	36.3	N/A	N/A	N/A	13.97	354.84	15.50	393.70	15.78	400.81
H20J403DBF	40	1.1	77.0	34.9	80.0	36.3	N/A	N/A	N/A	13.97	354.84	15.50	393.70	15.78	400.81
H20J403DBL	40	1.1	77.0	34.9	80.0	36.3	N/A	N/A	N/A	13.97	354.84	15.50	393.70	15.78	400.81
H20J403DBL	40	1.1	77.0	34.9	80.0	36.3	N/A	N/A	N/A	13.97	354.84	15.50	393.70	15.78	400.81
H20J423ABC	40	1.1	81.0	36.7	84.0	38.1	65/370	216-259/330	3ARR3*3S*	13.97	354.84	15.50	393.70	15.78	400.81
H20J423DBD	40	1.1	77.0	34.9	80.0	36.3	N/A	N/A	N/A	13.97	354.84	15.50	393.70	15.78	400.81
H20J423DBD	40	1.1	77.0	34.9	80.0	36.3	N/A	N/A	N/A	13.97	354.84	15.50	393.70	15.78	400.81

H20J423DBE	380-415/3/50	35200	10314	3150	11.2	3.3	45400	2430	18.7	5.6	42	9	4.235	69.39
H20J423DBE	460/3/60	41600	12189	3680	11.3	3.3	53900	2890	18.7	5.5	42	10	4.235	69.39
H20J423DBF	575/3/60	41600	12189	3680	11.3	3.3	53900	2890	18.7	4.4	36	8	4.235	69.39
H20J433ABC	208-230/1/60	42800	12540	3840	11.2	3.3	54500	2980	18.3	17.5	102	27	4.310	70.62
H20J443ABC	208-230/1/60	44300	12980	3960	11.2	3.3	56400	3070	18.3	17.8	102	28	4.417	72.37
H20J443DBD	200-220/3/50	37700	11046	3370	11.2	3.3	48600	2580	18.8	12	90	18	4.417	72.37
H20J443DBD	208-230/3/60	44100	12921	3880	11.4	3.3	57100	3020	18.9	11.7	88	18	4.417	72.37
H20J443DBE	380-415/3/50	37700	11046	3370	11.2	3.3	48600	2580	18.8	6	42	9	4.417	72.37
H20J443DBE	460/3/60	44100	12921	3880	11.4	3.3	57100	3020	18.9	5.8	42	10	4.417	72.37
H20J443DBF	575/3/60	44100	12921	3880	11.4	3.3	57100	3020	18.9	4.6	36	8	4.417	72.37

Data Subject to Revision

	Oil Charge		Weight Net		Weight Ship		ELECTRICAL START COMPONENTS Run Capacitor	Start Capacitor	G.E.	DIMENSIONS A		B		C	
Model	OZ	L	Lbs	Kg	Lbs	Kg	MFD/VOLTS	MFD/VOLTS	Relay	IN	MM	IN	MM	IN	MM
H20J423DBE	40	1.1	77.0	34.9	80.0	36.3	N/A	N/A	N/A	13.97	354.84	15.50	393.70	15.78	400.81
H20J423DBE	40	1.1	77.0	34.9	80.0	36.3	N/A	N/A	N/A	13.97	354.84	15.50	393.70	15.78	400.81
H20J423DBF	40	1.1	77.0	34.9	80.0	36.3	N/A	N/A	N/A	13.97	354.84	15.50	393.70	15.78	400.81
H20J433ABC	40	1.1	81.0	36.7	84.0	38.1	65/370	216-259/330	3ARR3*3S*	15.17	385.32	15.50	393.70	15.78	400.81
H20J443ABC	40	1.1	81.0	36.7	84.0	38.1	65/370	216-259/330	GE 3ARR3*3S*	13.97	354.84	15.50	393.70	15.78	400.81
H20J443DBD	40	1.1	77.0	34.9	80.0	36.3	N/A	N/A	N/A	13.97	354.84	15.50	393.70	15.78	400.81
H20J443DBD	40	1.1	77.0	34.9	80.0	36.3	N/A	N/A	N/A	13.97	354.84	15.50	393.70	15.78	400.81
H20J443DBE	40	1.1	77.0	34.9	80.0	36.3	N/A	N/A	N/A	13.97	354.84	15.50	393.70	15.78	400.81
H20J443DBE	40	1.1	77.0	34.9	80.0	36.3	N/A	N/A	N/A	13.97	354.84	15.50	393.70	15.78	400.81
H20J443DBF	40	1.1	77.0	34.9	80.0	36.3	N/A	N/A	N/A	13.97	354.84	15.50	393.70	15.78	400.81

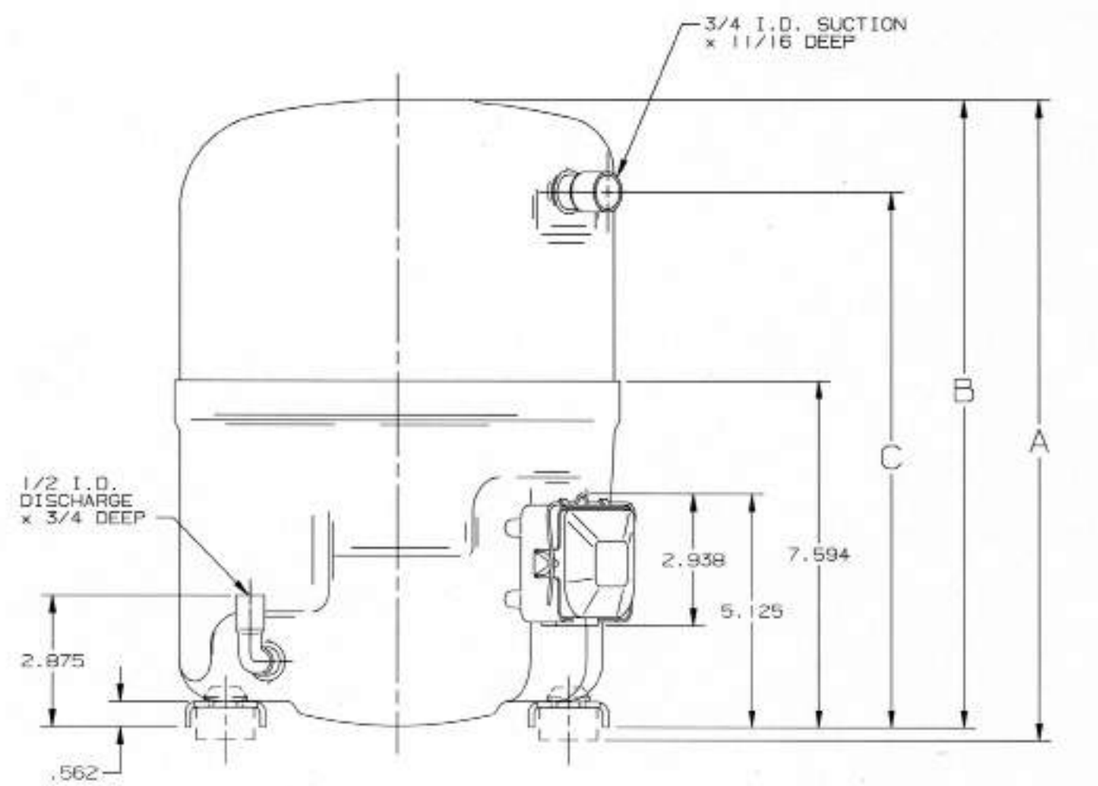

H20J

H21J *SERIES*

Model	Volts Phase Hz	@45/130 Capacity BTU/H	@45/130 Capacity WATTS	@45/130 Motor Input WATTS	@45/130 EER/COP BTU/WH	@45/130 EER/COP W/W	@45/100 Capacity BTU/H	@45/100 Motor Input WATTS	@45/100 EER BTU/WH	Electrical Data RLA	Electrical Data LRA	Electrical Data MCC	Displacement IN3/REV	Displacement CM3/REV
H21J *SERIES (R22)*														
H21J14*ABC	208-230/1/60	13600	3984	1280	10.6	3.1	19300	1060	18.2	5.4	36	10	1.683	27.57
H21J15*ABC	208-230/1/60	14500	4248	1380	10.5	3.1	20700	1140	18.1	6	36	10.5	1.790	29.27
H21J17*ABC	208-230/1/60	18300	5362	1660	11.1	3.3	24700	1330	18.7	7	40.5	12.5	2.116	34.67
H21J19*ABC	208-230/1/60	19500	5714	1730	11.3	3.3	25800	1360	18.9	8	54	15.5	2.172	35.59
H21J20*ABC	208-230/1/60	20200	5918	1850	10.9	3.2	27300	1460	18.7	8	54	16	2.224	36.44
H21J22*ABC	208-230/1/60	22400	6563	2000	11.2	3.3	29700	1560	19.0	9.9	61	16	2.539	41.60
H21J24*ABC	208-230/1/60	24000	7041	2180	11.0	3.2	32500	1700	19.1	10.1	61	16.5	2.664	43.65
H21J25*ABC	208-230/1/60	24600	7202	2220	11.1	3.3	33400	1760	19.0	10.7	61	17	2.770	45.32
H21J253DBL	200-230/3/60	25400	7442	2280	11.1	3.3	33900	1820	18.7	6.8	63	12.3	2.770	45.32
H21J253DBL	200-220/3/50	21400	6270	1930	11.1	3.3	28700	1530	18.7	7.5	64	12.2	2.770	45.32
H21J253DBV	380-460/3/60	25400	7442	2280	11.1	3.3	33900	1820	18.7	3.5	30	6.1	2.770	45.32
H21J253DBV	380-415/3/50	21400	6270	1930	11.1	3.3	28700	1530	18.7	3.5	30	6.1	2.770	45.32
H21J27*ABC	208-230/1/60	27000	7911	2420	11.5	3.4	36440	1900	19.1	11.1	78	19.5	2.915	47.76
H21J273DBL	200-230/3/60	27600	8087	2420	11.4	3.3	36300	1910	19.0	7.4	63	12.5	2.915	47.76
H21J273DBV	380-460/3/60	27700	8116	2440	11.3	3.3	36400	1910	19.0	3.6	30	7	2.915	47.76
H21J29*ABC	208-230/1/60	29100	8526	2520	11.5	3.4	38100	1980	19.2	11.6	78	20.7	3.028	49.61
H21J30*ABC	208-230/1/60	29720	8708	2600	11.4	3.3	39500	2050	19.2	11.8	78	21	3.129	51.27
H21J303DBF	575/3/60	29700	8702	2620	11.4	3.3	39600	2060	19.2	3.7	36	6.6	3.129	51.27
H21J303DBL	200-230/3/60	29700	8702	2600	11.4	3.3	33950	2050	19.2	8	72	16	3.129	51.27
H21J303DBL	200-220/3/50	25300	7413	2270	11.1	3.3	33100	1760	18.8	8.8	76	14	3.129	51.27
H21J303DBV	380-415/3/50	25300	7413	2270	11.1	3.3	33100	1760	18.8	5.2	45	9	3.129	51.27
H21J303DBV	380-460/3/60	29700	8702	2600	11.4	3.3	39500	2050	19.2	4.5	45	7.7	3.129	51.27
H21J32*ABC	208-230/1/60	30900	9053	2720	11.4	3.3	41200	2120	19.4	12.3	78	21	3.242	53.12
H21J323DBL	200-230/3/60	30900	9053	2660	11.6	3.4	40900	2100	19.5	8.3	72	16.2	3.242	53.12
H21J323DBL	200-220/3/50	26700	7823	2310	11.5	3.4	34100	1750	19.5	8.6	76	15	3.242	53.12
H21J323DBV	380-460/3/60	30900	9053	2660	11.6	3.4	40900	2100	19.5	4.6	45	9	3.242	53.12
H21J323DBV	380-415/3/50	26700	7823	2310	11.5	3.4	34100	1750	19.5	4.7	45	8	3.242	53.12
H21J34*ABC	208-230/1/60	34170	10011	2980	11.5	3.4	44640	2340	19.1	13.2	78	23	3.531	57.85
H21J343DBL	200-220/3/50	29200	8556	2600	11.2	3.3	37600	1990	18.9	9	76	15	3.531	57.85
H21J343DBL	200-230/3/60	34100	9991	2980	11.5	3.4	44400	2320	19.1	8.9	72	15	3.531	57.85
H21J343DBV	380/415-3-50	29200	8556	2600	11.2	3.3	37600	1990	18.9	5.2	45	8.4	3.531	57.85
H21J343DBV	380-460/3/60	34100	9991	2980	11.5	3.4	44400	2320	19.1	5	45	8	3.531	57.85
H21J36*ABC	208-230/1/60	35950	10533	3150	11.4	3.3	46660	2420	19.3	14.1	78	23	3.669	60.12
H21J363DBF	575/3/60	35900	10518	3140	11.4	3.3	46500	2430	19.1	4.1	36	6.9	3.669	60.12
H21J363DBL	200-230/3/60	35600	10431	3080	11.6	3.4	46600	2420	19.2	9.2	71	15	3.669	60.12
H21J363DBL	200-220/3/50	31000	9083	2670	11.6	3.4	39500	2020	19.6	9.5	76	16	3.669	60.12
H21J363DBV	380-460/3/60	36000	10548	3140	11.4	3.3	46500	2410	19.3	5.1	45	8	3.669	60.12
H21J363DBV	380-415/3/50	30600	8965	2690	11.4	3.3	39000	2050	19.0	4.7	45	7.1	3.669	60.12
H21J38*ABC	208-230/1/60	39000	11435	3370	11.6	3.4	49700	2580	19.3	15.4	86	26.5	3.883	63.63
H21J383DBL	200-220/3/50	33400	9786	2950	11.3	3.3	42500	2260	18.8	11.1	90	17	3.870	63.41
H21J383DBL	200-230/3/60	38900	11398	3370	11.5	3.4	49800	2580	19.3	10.4	88	18	3.870	63.41

Data Subject to Revision

* In model number signifies models that are available with Bleed and Without Bleed
Example H21J36BABC -With Bleed
H21J363ABC - With out Bleed

Model	Oil Charge OZ	Oil Charge L	Weight Net Lbs	Weight Net Kg	Weight Ship Lbs	Weight Ship Kg	ELECTRICAL START COMPONENTS Run Capacitor MFD/VOLTS	ELECTRICAL START COMPONENTS Start Capacitor MFD/VOLTS	ELECTRICAL START COMPONENTS G.E. Relay	DIMENSIONS A IN	DIMENSIONS A MM	DIMENSIONS B IN	DIMENSIONS B MM	DIMENSIONS C IN	DIMENSIONS C MM
H21J14*ABC	30	0.9	66.0	29.9	69.5	31.5	35/370	145-175/250	GE3ARR3*3P*	12.36	313.92	13.89	352.81	14.19	360.38
H21J15*ABC	30	0.9	66.0	29.9	69.5	31.5	35/370	145-175/250	GE3ARR3*3P*	12.36	313.92	13.89	352.81	14.19	360.38
H21J17*ABC	30	0.9	66.0	29.9	69.5	31.5	35/370	145-175/250	GE3ARR*4A*	12.38	314.33	13.89	352.81	14.19	360.38
H21J19*ABC	30	0.9	57.5	26.1	61.0	27.7	35/370	145-175/330	GE 3ARR3*3T*	11.73	297.94	13.75	349.25	14.03	356.36
H21J20*ABC	30	0.9	68.0	30.8	71.5	32.4	35/370	145-175/250	GE3ARR3*3N*	12.53	318.14	14.14	359.16	14.44	366.73
H21J22*ABC	30	0.9	59.0	26.8	62.5	28.3	30/370	145-175/330	GE 3ARR3*3N*	11.73	297.94	13.75	349.25	14.03	356.36
H21J24*ABC	40	1.1	79.0	35.0	82.0	37.2	30/370	145-175/250	GE3ARR3*3S*	13.72	348.46	15.25	387.35	15.53	394.46
H21J25*ABC	40	1.1	79.0	35.0	82.0	37.2	30/370	145-175/250	GE3ARR3*3S*	13.72	348.46	15.25	387.35	15.53	394.46
H21J253DBL	40	1.1	71.0	32.3	74.5	33.8	N/A	N/A	N/A	13.72	348.46	15.25	387.35	15.53	394.46
H21J253DBL	40	1.1	71.0	32.3	74.5	33.8	N/A	N/A	N/A	13.72	348.46	15.25	387.35	15.53	394.46
H21J253DBV	40	1.1	71.0	32.3	74.5	33.8	N/A	N/A	N/A	13.72	348.46	15.25	387.35	15.53	394.46
H21J253DBV	40	1.1	71.0	32.3	74.5	33.8	N/A	N/A	N/A	13.72	348.46	15.25	387.35	15.53	394.46
H21J27*ABC	40	1.1	79.0	35.0	82.0	37.2	40/370	189-227/330	GE3ARR3*3S*	13.97	354.81	15.50	393.70	15.78	400.81
H21J273DBL	40	1.1	69.0	31.3	71.0	32.2	N/A	N/A	N/A	13.72	348.49	15.25	387.35	15.53	394.46
H21J273DBV	40	1.1	69.0	31.3	71.0	32.2	N/A	N/A	N/A	13.72	348.49	15.25	387.35	15.53	394.46
H21J29*ABC	40	1.1	77.0	34.9	80.0	36.3	40/370	189-227/330	3ARR3*3S*	13.97	354.84	15.50	393.70	15.78	400.81
H21J30*ABC	40	1.1	79.0	35.0	82.0	37.2	40/370	189-227/330	GE3ARR3*3S*	13.97	354.81	15.50	393.70	15.78	400.81
H21J303DBF	40	1.1	75.5	34.3	78.5	35.7	N/A	N/A	N/A	13.97	354.81	15.50	393.70	15.78	400.81
H21J303DBL	40	1.1	77.0	35.0	80.0	36.4	N/A	N/A	N/A	13.97	354.81	15.50	393.70	15.78	400.81
H21J303DBL	40	1.1	77.0	35.0	80.0	36.4	N/A	N/A	N/A	13.97	354.81	15.50	393.70	15.78	400.81
H21J303DBV	40	1.1	77.0	34.9	80.0	36.3	N/A	N/A	N/A	13.97	354.84	15.50	393.70	15.78	400.81
H21J303DBV	40	1.1	77.0	34.9	80.0	36.3	N/A	N/A	N/A	13.97	354.84	15.50	393.70	15.78	400.81
H21J32*ABC	40	1.1	79.0	35.0	82.0	37.2	40/370	189-227/330	GE3ARR3*3S*	13.97	354.81	15.50	393.70	15.78	400.81
H21J323DBL	40	1.1	77.0	35.0	80.0	36.4	N/A	N/A	N/A	13.97	354.81	15.50	393.70	15.78	400.81
H21J323DBL	40	1.1	77.0	34.9	80.0	36.3	N/A	N/A	N/A	13.97	354.84	15.50	393.70	15.78	400.81
H21J323DBV	40	1.1	77.0	35.0	80.0	36.4	N/A	N/A	N/A	13.97	354.81	15.50	393.70	15.78	400.81
H21J323DBV	40	1.1	77.0	35.0	80.0	36.4	N/A	N/A	N/A	13.97	354.81	15.50	393.70	15.78	400.81
H21J34*ABC	40	1.1	79.0	35.0	82.0	37.2	45/370	189-227/330	GE3ARR3*3S*	13.97	354.81	15.50	393.70	15.78	400.81
H21J343DBL	40	1.1	72.0	32.7	75.0	34.0	N/A	N/A	N/A	13.97	354.84	15.50	393.70	15.78	400.81
H21J343DBL	40	1.1	72.0	32.7	75.0	34.0	N/A	N/A	N/A	13.97	354.84	15.50	393.70	15.78	400.81
H21J343DBV	40	1.1	72.0	32.7	75.0	34.0	N/A	N/A	N/A	13.97	354.84	15.50	393.70	15.78	400.81
H21J343DBV	40	1.1	72.0	32.7	75.0	34.0	N/A	N/A	N/A	13.97	354.84	15.50	393.70	15.78	400.81
H21J36*ABC	40	1.1	79.0	35.0	82.0	37.2	45/370	189-227/330	GE3ARR3*3S*	13.97	354.81	15.50	393.70	15.78	400.81
H21J363DBF	40	1.1	75.5	34.3	78.5	35.7	N/A	N/A	N/A	13.97	354.81	15.50	393.70	15.78	400.81
H21J363DBL	40	1.1	72.0	32.7	75.0	34.0	N/A	N/A	N/A	13.97	354.84	15.50	393.70	15.78	400.81
H21J363DBL	40	1.1	73.0	33.2	77.0	35.0	N/A	N/A	N/A	13.97	354.81	15.50	393.70	15.78	400.81
H21J363DBV	40	1.1	75.0	34.1	78.0	35.5	N/A	N/A	N/A	13.97	354.81	15.50	393.70	15.78	400.81
H21J363DBV	40	1.1	75.0	34.1	78.0	35.5	N/A	N/A	N/A	13.97	354.81	15.50	393.70	15.78	400.81
H21J38*ABC	40	1.1	81.0	36.7	84.0	38.1	45/370	189-227/250	GE3ARR3*3S*	14.22	361.16	15.75	400.05	16.03	407.16
H21J383DBL	40	1.1	72.0	32.7	75.0	34.0	N/A	N/A	N/A	14.22	361.19	15.75	400.05	16.03	407.16
H21J383DBL	40	1.1	72.0	32.7	75.0	34.0	N/A	N/A	N/A	14.22	361.19	15.75	400.05	16.03	407.16

H21J *SERIES*

Model	Volts Phase Hz	@45/130 Capacity BTU/H	@45/130 Capacity WATTS	@45/130 Motor Input WATTS	@45/130 EER/COP BTU/WH	@45/130 EER/COP W/W	@45/100 Capacity BTU/H	@45/100 Motor Input WATTS	@45/100 EER BTU/WH	Electrical Data RLA	Electrical Data LRA	Electrical Data MCC	Displacement IN3/REV	Displacement CM3/REV
H21J *SERIES (R22)*														
H21J383DBV	380-415/3/50	32800	9610	2850	11.5	3.4	41700	2140	19.5	6	42	8	3.883	63.63
H21J383DBV	380-460/3/60	38400	11257	3290	11.7	3.4	49000	2540	19.3	5.5	42	8.4	3.883	63.63
H21J40*ABC	208-230/1/60	41400	12130	3620	11.4	3.3	52700	2800	18.8	17.4	102	28	4.084	66.92
H21J403DBV	380-415/3/50	35200	10314	3080	11.4	3.3	44900	2350	19.1	5.4	42	8.2	4.084	66.92
H21J403DBV	380-460/3/60	41400	12130	3620	11.4	3.3	52700	2800	18.8	5.3	42	8.2	4.084	66.92
H21J43*ABC	208-230/1/60	43500	12746	3830	11.4	3.3	55600	2980	18.7	17.5	102	29	4.310	70.62
H21J433DBV	380-415/3/50	36800	10782	3250	11.3	3.3	46400	2440	19.0	6	42	8.5	4.310	70.62
H21J433DBV	380-460/3/60	42900	12570	3770	11.4	3.3	54700	2920	18.7	5.7	42	9	4.310	70.62
H21J44*ABC	208-230/1/60	45700	13390	4020	11.4	3.3	58000	3150	18.4	18.5	102	28	4.417	72.37
H21J443DBD	208-230/3/60	45400	13302	3980	11.4	3.3	57400	3120	18.4	11.7	88	18	4.417	72.37

Data Subject to Revision

* In model number signifies models that are available with Bleed and Without Bleed
Example H21J36BABC -With Bleed
H21J363ABC - With out Bleed

Model	Oil Charge OZ	Oil Charge L	Weight Net Lbs	Weight Net Kg	Weight Ship Lbs	Weight Ship Kg	ELECTRICAL START COMPONENTS Run Capacitor MFD/VOLTS	ELECTRICAL START COMPONENTS Start Capacitor MFD/VOLTS	ELECTRICAL START COMPONENTS G.E. Relay	DIMENSIONS A IN	DIMENSIONS A MM	DIMENSIONS B IN	DIMENSIONS B MM	DIMENSIONS C IN	DIMENSIONS C MM
H21J383DBV	40	1.1	77.0	34.9	80.0	36.3	N/A	N/A	N/A	14.22	361.19	15.75	400.05	16.03	407.16
H21J383DBV	40	1.1	79.5	36.1	82.5	37.5	N/A	N/A	N/A	14.22	361.16	15.75	400.05	16.03	407.16
H21J40*ABC	40	1.1	81.0	36.7	84.0	38.1	50/370	216-259/330	GE3ARR3*3S*	14.22	361.16	15.75	400.05	16.03	407.16
H21J403DBV	40	1.1	77.0	34.9	80.0	36.3	N/A	N/A	N/A	15.42	391.67	15.75	400.05	16.03	407.16
H21J403DBV	40	1.1	77.0	34.9	80.0	36.3	N/A	N/A	N/A	15.42	391.67	15.75	400.05	16.03	407.16
H21J43*ABC	40	1.1	77.0	34.9	80.0	36.3	N/A	N/A	N/A	15.42	391.67	15.75	400.05	16.03	407.16
H21J433DBV	40	1.1	77.0	34.9	80.0	36.3	N/A	N/A	N/A	15.42	391.67	15.75	400.05	16.03	407.16
H21J433DBV	40	1.1	77.0	34.9	80.0	36.3	N/A	N/A	N/A	15.42	391.67	15.75	400.05	16.03	407.16
H21J44*ABC	40	1.1	77.0	34.9	80.0	36.3	65/370	216-259/330	3ARR3*3S*	14.22	361.19	15.75	400.05	16.03	407.16
H21J443DBD	40	1.1	72.0	32.7	75.0	34.0	N/A	N/A	N/A	14.22	361.19	15.75	400.05	16.03	407.16

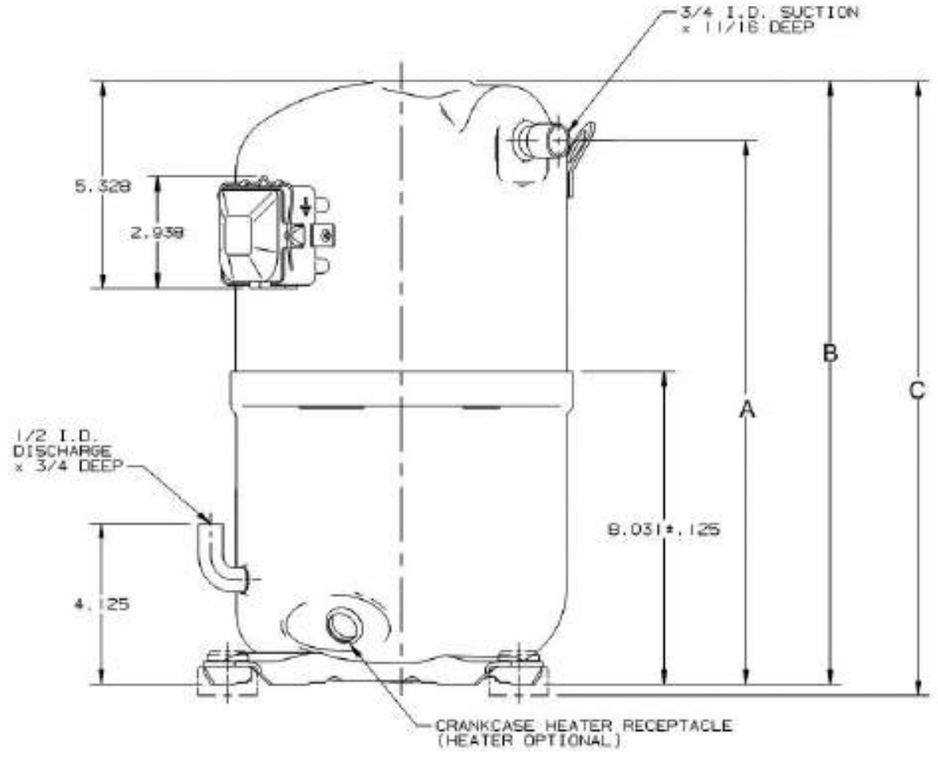

H21J

H22J *SERIES*

Model	Volts Phase Hz	@45/130 Capacity BTU/H	@45/130 Capacity WATTS	@45/130 Motor Input WATTS	@45/130 EER/COP BTU/WH	@45/130 EER/COP W/W	@45/100 Capacity BTU/H	@45/100 Motor Input WATTS	@45/100 EER BTU/WH	Electrical Data RLA	Electrical Data LRA	Electrical Data MCC	Displacement IN3/REV	Displacement CM3/REV
H22J *SERIES (R22)*														
H22J13BABC	208-230/1/60	13300	3897	1270	10.4	3.0	19000	1090	17.4	6	48	10.1	1.664	27.27
H22J15BABC	208-230/1/60	15500	4541	1480	10.5	3.1	21300	1220	17.5	6.7	48	12	1.880	30.80
H22J18BABC	208-230/1/60	18300	5361	1710	10.7	3.1	24900	1410	17.6	7.4	48	14	2.139	35.05
H22J18BABH	265/1/60	18100	5303	1690	10.7	3.1	24300	1390	17.4	6.5	44	11.5	2.139	35.05
H22J18BABH	220-240/1/50	15300	4483	1450	10.6	3.1	20500	1170	17.6	6.7	42	12	2.139	35.05
H22J20BABC	208-230/1/60	20500	6006	1900	10.8	3.2	26900	1520	17.7	8.6	60	17	2.416	39.59
H22J20BABH	265/1/60	20800	6094	1940	10.7	3.1	28800	1630	17.7	7.2	58	15	2.416	39.59
H22J20BABH	220-240/1/50	17900	5245	1680	10.7	3.1	23800	1350	17.7	7.6	55	14.5	2.416	39.59
H22J22BABC	208-230/1/60	22600	6621	2100	10.8	3.2	30700	1720	17.8	9.6	60	18	2.586	42.37
H22J22BABH	265/1/60	22700	6651	2070	11.0	3.2	31100	1730	18.0	8.2	58	15	2.586	42.37
H22J22BABH	220-240/1/50	19600	5743	1800	10.9	3.2	26000	1440	18.0	8.4	55	15	2.586	42.37
H22J253DBL	200-230/3/60	23500	6885	2160	10.9	3.2	31800	1760	18.1	6.5	58	13	2.699	44.24
H22J253DBL	200-220/3/50	20400	5977	1940	10.5	3.1	27200	1560	17.5	7.1	60	13.1	2.699	44.24
H22J253DBV	380-460/3/60	23600	6915	2170	10.9	3.2	31400	1740	18.0	3.4	30	6.7	2.699	44.24
H22J253DBV	380-415/3/50	20300	5948	1920	10.6	3.1	27100	1530	17.7	3.4	30	6.7	2.699	44.24
H22J25BABC	208-230/1/60	24200	7090	2190	11.1	3.3	32300	1770	18.2	9.6	61	19	2.699	44.24
H22J25BABH	265/1/60	23600	6915	2110	11.2	3.3	32000	1770	18.1	8.3	58	14.1	2.669	44.24
H22J25BABH	220-240/1/50	20200	5919	1840	10.9	3.2	26900	1490	18.0	9.4	56	13.6	2.699	44.24
H22J293DBF	575/3/60	28800	8438	2620	11.0	3.2	37400	2080	17.9	3.7	32	6.4	3.056	50.07
H22J293DBL	200-230/3/60	28000	8204	2530	11.0	3.2	35800	1970	18.2	7.8	68	13.5	3.056	50.07
H22J293DBL	200-220/3/50	24400	7149	2270	10.7	3.1	31600	1790	17.7	8.7	68	13.7	3.056	50.07
H22J293DBV	380-460/3/60	27800	8145	2570	10.8	3.2	36100	2050	17.7	4.1	36	7.4	3.056	50.07
H22J293DBV	380-415/3/50	23900	7003	2270	10.5	3.1	31600	1730	18.2	4.2	38	7.4	3.056	50.07
H22J29BABC	208-230/1/60	28800	8438	2590	11.1	3.3	36600	2040	18.0	11.8	73	22	3.056	50.07
H22J29BABH	265/1/60	28500	8350	2550	11.2	3.3	37300	2080	17.9	10.3	72	18.5	3.056	50.07
H22J29BABH	220-240/1/50	23500	6885	2150	11.0	3.2	31700	1750	18.1	10.5	70	17.2	3.056	50.07
H22J333DBF	575/3/60	33000	9669	3040	10.9	3.2	43000	2450	17.5	3.7	32	6.4	3.498	57.33
H22J333DBL	200-230/3/60	32400	9493	2900	11.2	3.3	41300	2310	17.9	9	78	16	3.361	55.09
H22J333DBL	200-220/3/50	27900	8175	2580	10.8	3.2	35900	2010	17.8	9.5	82	16	3.361	55.09
H22J333DBV	380-460/3/60	31600	9259	2880	11.0	3.2	40700	2320	17.5	4.5	40	8.1	3.361	55.09
H22J333DBV	380-415/3/50	26100	7647	2420	10.8	3.2	34900	1970	17.7	4.7	42	8	3.361	55.09
H22J33BABC	208-230/1/60	31900	9346	2880	11.1	3.3	41200	2280	18.1	13	82	24	3.361	55.09
H22J33BABH	265/1/60	32000	9376	2940	10.9	3.2	40800	2340	17.5	11.8	80	20.5	3.361	55.09
H22J33BABH	220-240/1/50	26400	7735	2410	10.9	3.2	35000	1960	17.9	11.9	76	19.2	3.361	55.09
H22J363DBF	575/3/60	34100	9991	3180	10.7	3.1	42800	2480	17.3	3.9	32	6.2	3.695	60.55
H22J363DBL	200-230/3/60	35000	10255	3230	10.9	3.2	42700	2430	17.6	9.6	78	16	3.695	60.55
H22J363DBL	200-220/3/50	30400	8907	2850	10.7	3.1	37500	2140	17.5	10.3	82	16.8	3.695	60.55
H22J363DBV	380-460/3/60	34400	10079	3210	10.7	3.1	44300	2570	17.2	4.9	40	8.6	3.695	60.55
H22J363DBV	380-415/3/50	29600	8673	2800	10.6	3.1	38100	2130	17.8	5	42	8.6	3.695	60.55
H22J36BABC	208-230/1/60	35700	10460	3220	11.1	3.3	45300	2540	17.8	14.4	86	26	3.695	60.55
H22J36BABH	265/1/60	35500	10401	3290	10.8	3.2	44900	2630	17.1	13	90	24	3.695	60.55
H22J36BABH	220-240/1/50	30000	8790	2770	10.8	3.2	38900	2220	17.5	13.4	85	23	3.695	60.55

Data Subject to Revision

Model	Oil Charge OZ	Oil Charge L	Weight Net Lbs	Weight Net Kg	Weight Ship Lbs	Weight Ship Kg	ELECTRICAL START COMPONENTS Run Capacitor MFD/VOLTS	ELECTRICAL START COMPONENTS Start Capacitor MFD/VOLTS	ELECTRICAL START COMPONENTS G.E. Relay	DIMENSIONS A IN	DIMENSIONS A MM	DIMENSIONS B IN	DIMENSIONS B MM	DIMENSIONS C IN	DIMENSIONS C MM
H22J13BABC	35	1.0	59.0	26.8	63.0	28.6	30/370	161-193/250	3ARR3*3V*	11.20	284.48	13.20	335.28	13.50	342.90
H22J15BABC	35	1.0	59.5	27.0	63.0	28.6	30/370	161-193/250	3ARR3*3V*	11.20	284.48	13.20	335.28	13.50	342.90
H22J18BABC	35	1.0	59.5	27.0	63.0	28.6	30/370	161-193/250	3ARR3*3V*	11.20	284.48	13.20	335.28	13.50	342.90
H22J18BABH	35	1.0	61.5	27.9	64.0	29.0	25/440	88-108/330	3ARR3*10U	11.20	284.48	13.20	335.28	13.50	342.90
H22J18BABH	35	1.0	61.0	27.7	63.5	28.8	30/370	145-175/250	()	11.20	287.02	13.30	337.82	13.60	345.44
H22J20BABC	35	1.0	61.0	27.7	64.5	29.3	30/370	145-175/250	3ARR3*3U*	11.20	284.48	13.20	335.28	13.50	342.90
H22J20BABH	35	1.0	63.5	28.8	67.0	30.4	30/440	88-108/330	3ARR3*10S*	11.70	297.18	13.80	350.52	14.00	355.60
H22J20BABH	35	1.0	63.5	28.8	67.0	30.4	35/370	145-175/250	3ARR3*10S*	11.70	299.72	13.80	350.52	14.00	355.60
H22J22BABC	35	1.0	61.0	27.7	64.5	29.3	30/370	145-175/250	3ARR3*3U*	11.20	284.48	13.20	335.28	13.50	342.90
H22J22BABH	35	1.0	65.0	29.5	68.5	31.1	30/440	88-108/330	3ARR3*10S*	11.70	297.18	13.80	350.52	14.00	355.60
H22J22BABH	35	1.0	63.5	28.8	67.0	30.4	35/370	145-175/250	3ARR3*10U*	11.70	299.72	13.80	350.52	14.00	355.60
H22J253DBL	35	1.0	61.0	27.7	64.5	29.3	N/A	N/A	N/A	11.70	297.18	13.80	350.52	14.00	355.60
H22J253DBL	35	1.0	61.0	27.7	64.5	29.3	N/A	N/A	N/A	11.70	299.72	13.80	350.52	14.00	355.60
H22J253DBV	35	1.0	61.0	27.7	64.5	29.3	N/A	N/A	N/A	11.70	297.18	13.80	350.52	14.00	355.60
H22J253DBV	35	1.0	61.0	27.7	64.5	29.3	N/A	N/A	N/A	11.70	299.72	13.80	350.52	14.00	355.60
H22J25BABC	35	1.0	63.5	28.8	67.0	30.4	35/370	145-175/250	3ARR3*3T*	11.70	297.18	13.80	350.52	14.00	355.60
H22J25BABH	35	1.0	65.0	29.5	68.5	31.1	30/440	88-108/330	3ARR3*10S*	11.70	297.18	13.80	350.52	14.00	355.60
H22J25BABH	35	1.0	65.0	29.5	68.5	31.1	40/370	145-175/250	3ARR3*10S*	11.70	299.72	13.80	350.52	14.00	355.60
H22J293DBF	35	1.0	65.0	29.7	69.0	31.2	N/A	N/A	()	12.20	310.00	14.20	361.00	14.50	368.00
H22J293DBL	35	1.0	64.0	29.0	67.5	30.6	N/A	N/A	N/A	11.70	297.18	13.80	350.52	14.00	355.60
H22J293DBL	35	1.0	64.0	29.0	67.5	30.6	N/A	N/A	N/A	11.70	299.72	13.80	350.52	14.00	355.60
H22J293DBV	35	1.0	64.0	29.0	67.5	30.6	N/A	N/A	N/A	11.70	297.18	13.80	350.52	14.00	355.60
H22J293DBV	35	1.0	64.0	29.0	67.5	30.6	N/A	N/A	N/A	11.70	299.72	13.80	350.52	14.00	355.60
H22J29BABC	35	1.0	63.5	28.8	67.0	30.4	35/370	161-193/250	3ARR3*3T*	11.70	297.18	13.80	350.52	14.00	355.60
H22J29BABH	35	1.0	65.5	29.7	69.0	31.3	30/440	88-108/330	3ARR3*3L*	11.70	297.18	13.80	350.52	14.00	355.60
H22J29BABH	35	1.0	65.0	29.5	68.5	31.1	40/370	145-175/250	3ARR3*3L*	11.70	299.72	13.80	350.52	14.00	355.60
H22J333DBF	35	1.0	67.5	30.6	71.0	32.2	N/A	N/A	N/A	12.20	309.88	14.30	363.22	14.50	368.30
H22J333DBL	35	1.0	67.5	30.6	71.0	32.2	N/A	N/A	N/A	12.20	309.88	14.30	363.22	14.50	368.30
H22J333DBL	35	1.0	67.5	30.6	71.0	32.2	N/A	N/A	N/A	12.20	309.88	14.30	363.22	14.50	368.30
H22J333DBV	35	1.0	67.5	30.6	71.0	32.2	N/A	N/A	N/A	12.20	309.88	14.30	363.22	14.50	368.30
H22J333DBV	35	1.0	67.5	30.6	71.0	32.2	N/A	N/A	N/A	12.20	309.88	14.30	363.22	14.50	368.30
H22J33BABC	35	1.0	68.5	31.1	72.0	32.7	40/370	145-175/250	3ARR3*3P*	12.20	309.88	14.20	360.68	14.50	368.30
H22J33BABH	35	1.0	66.5	30.2	70.0	31.8	30/440	88-108/330	3ARR3*10S*	12.20	309.88	14.30	363.22	14.50	368.30
H22J33BABH	35	1.0	66.5	30.2	70.0	31.8	40/370	145-175/250	3ARR3*10S*	12.30	312.42	14.30	363.22	14.60	370.84
H22J363DBF	35	1.0	67.5	30.6	71.0	32.2	N/A	N/A	N/A	12.20	309.88	14.30	363.22	14.50	368.30
H22J363DBL	35	1.0	67.5	30.6	71.0	32.2	N/A	N/A	N/A	12.20	309.88	14.30	363.22	14.50	368.30
H22J363DBL	35	1.0	67.5	30.6	71.0	32.2	N/A	N/A	N/A	12.20	309.88	14.30	363.22	14.50	368.30
H22J363DBV	35	1.0	67.5	30.6	71.0	32.2	N/A	N/A	N/A	12.20	309.88	14.30	363.22	14.50	368.30
H22J363DBV	35	1.0	67.5	30.6	71.0	32.2	N/A	N/A	N/A	12.20	309.88	14.30	363.22	14.50	368.30
H22J36BABC	40	1.1	70.0	31.8	73.5	33.3	45/370	145-175/250	3ARR3*3N*	12.20	309.88	14.20	360.68	14.50	368.30
H22J36BABH	35	1.0	70.0	31.8	73.5	33.3	35/440	88-108/330	3ARR3*10S*	12.20	309.88	14.30	363.22	14.50	368.30
H22J36BABH	35	1.0	68.0	30.8	71.5	32.4	45/370	145-175/250	3ARR3*10S*	12.20	309.88	14.30	363.22	14.60	370.84

H22J *SERIES*

Model	Volts Phase Hz	@45/130 Capacity BTU/H	@45/130 Capacity WATTS	@45/130 Motor Input WATTS	@45/130 EER/COP BTU/WH	@45/130 EER/COP W/W	@45/100 Capacity BTU/H	@45/100 Motor Input WATTS	@45/100 EER BTU/WH	Electrical Data RLA	Electrical Data LRA	Electrical Data MCC	Displacement IN3/REV	Displacement CM3/REV
H22J *SERIES* (R22)														
H22J383DBF	575/3/60	37500	10987	3380	11.1	3.3	48800	2660	18.4	4	36	8	3.870	63.43
H22J383DBL	200-230/3/60	37500	10987	3380	11.1	3.3	48800	2660	18.4	10.2	88	18	3.870	63.43
H22J383DBL	200-220/3/50	31900	9347	2940	10.8	3.2	41200	2280	18.1	11.1	90	17	3.870	63.43
H22J383DBV	380-460/3/60	37500	10987	3380	11.1	3.3	48800	2660	18.4	5	42	9	3.870	63.43
H22J383DBV	380-415/3/50	31900	9347	2940	10.8	3.2	41200	2280	18.1	5.2	42	9	3.870	63.43
H22J38BABC	208-230/1/60	37800	11090	3460	10.9	3.2	49000	2640	18.5	14.9	86	24	3.870	63.43
H22J413DBE	380-460/3/60	40400	11837	3610	11.2	3.3	52300	2860	18.3	5.4	42	9	4.147	67.97
H22J413DBE	380-415/3/50	34900	10226	3230	10.8	3.2	44300	2480	17.9	5.6	42	9	4.147	67.97
H22J413DBF	575/3/60	40400	11837	3610	11.2	3.3	52300	2860	18.3	4.3	36	8	4.147	67.97
H22J413DBL	200-230/3/60	40500	11866	3650	11.1	3.3	52500	2890	18.2	11	88	20	4.147	67.97
H22J413DBL	200-220/3/50	34900	10226	3230	10.8	3.2	44300	2480	17.9	11.6	90	19	4.147	67.97
H22J41BABC	208-230/1/60	40900	11983	3750	10.9	3.2	52800	2960	17.8	17.1	102	28	4.147	67.97
H22J443DBD	208-230-3-60	44100	12921	4040	10.9	3.2	57100	3140	18.2	11.7	88	18	4.417	72.4
H22J443DBD	200-220/3/50	37700	11046	3510	10.8	3.2	48600	2680	18.1	12	90	18	4.417	72.4
H22J443DBE	380-460/3/60	44100	12921	4040	10.9	3.2	57100	3140	18.2	5.8	42	10	4.417	72.4
H22J443DBE	380-415/3/50	37700	11046	3510	10.8	3.2	48600	2680	18.1	6	42	9	4.417	72.4
H22J443DBF	575/3/60	44100	12921	4040	10.9	3.2	57100	3140	18.2	4.6	36	8	4.417	72.4
H22J44BABC	208-230/1/60	44300	12979	4110	10.8	3.2	37300	3300	17.6	17.8	102	28	4.417	72.4

Data Subject to Revision

Model	Oil Charge OZ	Oil Charge L	Weight Net Lbs	Weight Net Kg	Weight Ship Lbs	Weight Ship Kg	ELECTRICAL START COMPONENTS Run Capacitor MFD/VOLTS	Start Capacitor MFD/VOLTS	G.E. Relay	DIMENSIONS A IN	A MM	B IN	B MM	C IN	C MM
H22J383DBF	40	1.1	77.0	34.9	80.0	36.3	N/A	N/A	N/A	14.00	355.60	15.50	393.70	15.80	401.32
H22J383DBL	40	1.1	77.0	34.9	80.0	36.3	N/A	N/A	N/A	14.00	355.60	15.50	393.70	15.80	401.32
H22J383DBL	40	1.1	77.0	34.9	80.0	36.3	N/A	N/A	N/A	14.00	355.60	15.50	393.70	15.80	401.32
H22J383DBV	40	1.1	77.0	34.9	80.0	36.3	N/A	N/A	N/A	14.00	355.60	15.50	393.70	15.80	401.32
H22J383DBV	40	1.1	77.0	34.9	80.0	36.3	N/A	N/A	N/A	14.00	355.60	15.50	393.70	15.80	401.32
H22J38BABC	40	1.1	81.0	36.7	84.0	38.1	45/370	189-227/250	3ARR3*3S*	15.20	386.08	15.50	393.70	15.80	401.32
H22J413DBE	40	1.1	77.0	34.9	80.0	36.3	N/A	N/A	N/A	14.00	355.60	15.50	393.70	15.80	401.32
H22J413DBE	40	1.1	77.0	34.9	80.0	36.3	N/A	N/A	N/A	14.00	355.60	15.50	393.70	15.80	401.32
H22J413DBF	40	1.1	77.0	34.9	80.0	36.3	N/A	N/A	N/A	14.00	355.60	15.50	393.70	15.80	401.32
H22J413DBL	40	1.1	77.0	34.9	80.0	36.3	N/A	N/A	N/A	14.00	355.60	15.50	393.70	15.80	401.32
H22J413DBL	40	1.1	77.0	34.9	80.0	36.3	N/A	N/A	N/A	14.00	355.60	15.50	393.70	15.80	401.32
H22J41BABC	40	1.1	81.0	36.7	84.0	38.1	50/370	216-259/330	3ARR3*3S*	15.20	386.08	15.50	393.70	15.80	401.32
H22J443DBD	40	1.1	77.0	34.9	80.0	36.3	N/A	N/A	N/A	14.00	355.60	15.50	393.70	15.80	401.32
H22J443DBD	40	1.1	77.0	34.9	80.0	36.3	N/A	N/A	N/A	14.00	355.60	15.50	393.70	15.80	401.32
H22J443DBE	40	1.1	77.0	34.9	80.0	36.3	N/A	N/A	N/A	14.00	355.60	15.50	393.70	15.80	401.32
H22J443DBE	40	1.1	77.0	34.9	80.0	36.3	N/A	N/A	N/A	14.00	355.60	15.50	393.70	15.80	401.32
H22J443DBF	40	1.1	77.0	34.9	80.0	36.3	N/A	N/A	N/A	14.00	355.60	15.50	393.70	15.80	401.32
H22J44BABC	40	1.1	77.0	34.9	80.0	36.3	65/370	216-259/330	GE 3ARR3*3S*	14.00	355.60	15.50	393.70	15.80	401.32

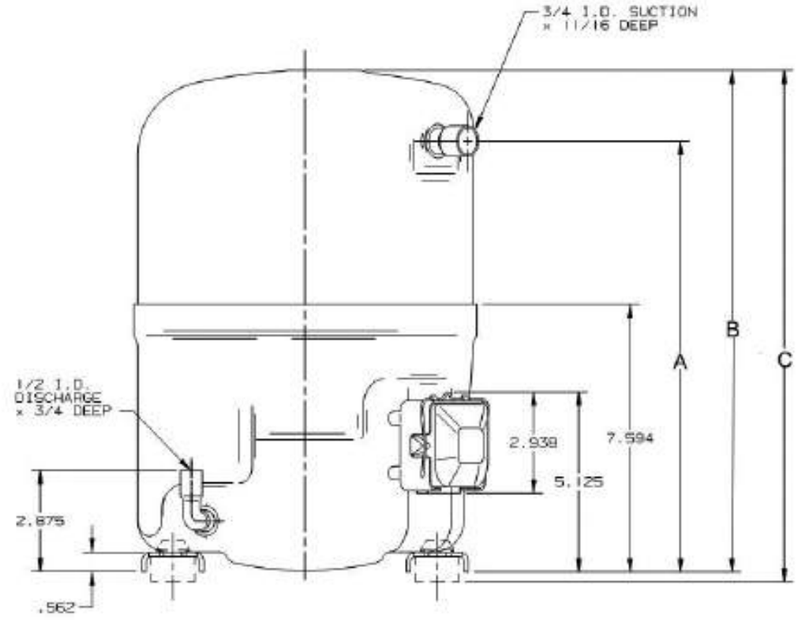

H22J

H82J *SERIES*

Model	Volts Phase Hz	@45/130 Capacity BTU/H	@45/130 Capacity WATTS	@45/130 Motor Input WATTS	@45/130 EER/COP BTU/WH	@45/130 EER/COP W/W	@45/100 Capacity BTU/H	@45/100 Motor Input WATTS	@45/100 EER BTU/WH	Electrical Data RLA	Electrical Data LRA	Electrical Data MCC	Displacement IN3/REV	Displacement CM3/REV
H82J *SERIES* (R410A)														
H82J09*ABC	208-230/1/60	9000	2637	1010	8.9	2.6	14700	910	16.3	4.5	45	10.6	0.947	15.52
H82J13*ABC	208-230/1/60	13000	3808	1330	9.7	2.8	19900	1120	17.8	5.9	43	11	1.260	20.64
H82J15*ABC	208-230/1/60	14700	4307	1480	9.9	2.9	22700	1240	18.2	6.5	43	13	1.363	22.28
H82J153ABH	265/1/60	14700	4307	1530	9.6	2.8	22700	1280	17.7	5.8	46	12.4	1.363	22.28
H82J153ABH	220-240/1/50	11900	3486	1270	9.4	2.8	18600	1070	17.3	6.2	48	12.1	1.363	22.28
H82J18*ABC	208-230/1/60	18100	5303	1780	10.1	3.0	26700	1440	18.6	7.4	43	13	1.570	25.72
H82J183ABH	265/1/60	18100	5303	1810	10.0	2.9	26700	1460	18.3	6.7	46	12.6	1.570	25.72
H82J183ABH	220-240/1/50	14800	4360	1540	9.6	2.8	22000	1220	17.9	7.4	48	12	1.570	25.72
H82J183DBL	200-230/3/60	18100	5303	1790	10.1	3.0	26800	1450	18.6	5.9	63	13.0	1.570	25.72
H82J183DBL	200-220/3/50	15300	4483	1570	9.8	2.9	22000	1240	17.8	6.7	64	13.0	1.570	25.72
H82J183DBV	380-415/3/50	15300	4508	1570	9.8	2.9	22000	1240	17.8	3	30	7	1.570	25.72
H82J183DBV	380-460/3/60	18100	5297	1790	10.1	3.0	26800	1450	18.6	2.9	30	6	1.570	25.72
H82J19*ABC	208-230/1/60	19000	5567	1870	10.2	3.0	28000	1510	18.6	8	43	14.5	1.655	27.13
H82J193DBL	200-220/3/50	16400	4815	1660	9.9	2.9	23600	1310	18.0	6.7	64	13	1.655	27.13
H82J193DBL	200-230/3/60	19000	5563	1880	10.1	3.0	28200	1520	18.6	6.1	63	13	1.655	27.13
H82J193DBV	380-415/3/50	16400	4805	1660	9.9	2.9	23600	1310	18.0	3.1	30	7	1.655	27.13
H82J193DBV	380-460/3/60	19000	5563	1880	10.1	3.0	28200	1520	18.6	3.1	30	6	1.655	27.13
H82J21*ABC	208-230/1/60	21000	6153	2040	10.3	3.0	30400	1630	18.6	9.4	54	17.5	1.768	28.97
H82J213ABH	265/1/60	21000	6153	2040	10.3	3.0	30400	1640	18.6	8	46	14	1.768	28.97
H82J213ABH	220-240/1/50	17500	5144	1810	9.7	2.8	25800	1410	18.3	8.6	48	14	1.768	28.97
H82J213DBF	575/3/60	21100	6182	2050	10.3	3.0	30500	1640	18.6	2.6	26	6	1.768	28.97
H82J213DBL	200-220/3/50	17700	5157	1760	10.0	2.9	25500	1400	18.3	6.9	64	13	1.768	28.97
H82J213DBL	200-230/3/60	21100	6187	2050	10.3	3.0	30500	1640	18.6	6.6	63	13.5	1.768	28.97
H82J213DBV	380-415/3/50	17700	5157	1760	10	2.9	25500	1400	18.3	3.3	30	7	1.768	28.97
H82J213DBV	380-460/3/60	21100	6187	2050	10.3	3.0	30500	1640	18.6	3.2	30	6.4	1.768	28.97
H82J22*ABC	208-230/1/60	22300	6534	2170	10.3	3.0	32300	1740	18.6	9.9	54	16.6	1.862	30.51
H82J223ABH	265/1/60	22300	6534	2170	10.3	3.0	32300	1740	18.6	8.5	46	14.3	1.862	30.51
H82J223ABH	220-240/1/50	18900	5514	1940	9.7	2.8	27800	1510	18.3	9.4	48	15	1.862	30.51
H82J223DBF	575/3/60	22400	6563	2170	10.3	3.0	32500	1740	18.6	2.7	26	6	1.862	30.51
H82J223DBL	200-220/3/50	18800	5479	1870	10	2.9	27000	1480	18.2	7.3	64	15	1.862	30.51
H82J223DBL	200-230/3/60	22400	6563	2170	10.3	3.0	32500	1740	18.6	6.9	63	12.7	1.862	30.51
H82J223DBV	380-415/3/50	18800	5479	1870	10.0	2.9	27000	1480	18.2	3.6	30	7.5	1.862	30.51
H82J223DBV	380-460/3/60	22400	6549	2170	10.3	3.0	32500	1740	18.6	3.6	30	6.5	1.862	30.51
H82J24*ABC	208-230/1/60	24300	7120	2330	10.4	3.0	34500	1840	18.7	10.6	54	17	1.975	32.36
H82J26*ABC	208-230/1/60	26200	7676	2490	10.5	3.1	37100	1970	18.9	11.6	74	20.5	2.097	34.36
H82J263ABH	265/1/60	26200	7677	2490	10.5	3.1	37100	1970	18.9	9.9	67	17.7	2.097	34.36
H82J263ABH	220-240/1/50	22200	6504	2170	10.2	3.0	31100	1680	18.6	10.4	64	17.0	2.097	34.36
H82J263DBF	575/3/60	26100	7647	2480	10.5	3.1	37000	1960	18.9	2.9	28	5.5	2.097	34.36
H82J263DBL	200-220/3/50	22300	6519	2160	10.3	3.0	31300	1680	18.7	7.5	70	13	2.097	34.36
H82J263DBL	200-230/3/60	26100	7630	2480	10.5	3.1	37000	1960	18.9	7.4	68	13.5	2.097	34.36
H82J263DBV	380-415/3/50	22300	6519	2160	10.3	3.0	31300	1680	18.7	3.9	35	7	2.097	34.36
H82J263DBV	380-460/3/60	26100	7630	2480	10.5	3.1	37000	1960	18.9	3.8	34	7.1	2.097	34.36

Data Subject to Revision

* In model number signifies models that are available with Bleed and Without Bleed
Example H82J35BABC -With Bleed
H82J353ABC - With out Bleed

Model	Oil Charge OZ	Oil Charge L	Weight Net Lbs	Weight Net Kg	Weight Ship Lbs	Weight Ship Kg	ELECTRICAL START COMPONENTS Run Capacitor MFD/VOLTS	ELECTRICAL START COMPONENTS Start Capacitor MFD/VOLTS	ELECTRICAL START COMPONENTS G.E. Relay	DIMENSIONS A IN	DIMENSIONS A MM	DIMENSIONS B IN	DIMENSIONS B MM	DIMENSIONS C IN	DIMENSIONS C MM
H82J09*ABC	30	.9	58.5	26.5	62.0	28.1	35/370	88-108/330	3ARR3*3T*	13.50	342.90	14.30	363.22	14.50	368.30
H82J13*ABC	30	.9	58.5	26.5	62.0	28.0	30/370	145-175/370	3ARR3*3T*	11.74	298.07	14.25	361.95	14.53	369.09
H82J15*ABC	30	.9	58.5	26.5	62.0	28.0	30/370	145-175/330	3ARR3*3T*	11.74	298.07	14.25	361.95	14.53	369.09
H82J153ABH	30	.9	63.5	29.0	67.0	30.0	30/440	145-175/330	3ARR3*3V*	11.74	298.07	14.25	361.95	14.53	369.09
H82J153ABH	30	.9	63.5	29.0	67.0	30.0	35/370	145-175/250	3ARR3*3AP*	11.74	298.07	14.25	361.95	14.53	369.09
H82J18*ABC	30	.9	58.5	26.5	62.0	28.0	35/370	145-175/330	3ARR3*3T*	11.74	298.07	14.25	361.95	14.53	369.09
H82J183ABH	30	.9	63.5	29.0	67.0	30.0	30/440	145-175/330	3ARR3*3V*	11.74	298.07	14.25	361.95	14.53	369.09
H82J183ABH	30	.9	63.5	29.0	67.0	30.0	35/370	145-175/250	3ARR3*3AP*	11.74	298.07	14.25	361.95	14.53	369.09
H82J183DBL	30	.9	62.5	28.3	66.0	29.9	N/A	N/A	N/A	11.70	297.00	14.25	362.00	14.50	368.00
H82J183DBL	30	.9	62.5	28.3	66.0	29.9	N/A	N/A	N/A	11.70	297.00	14.25	362.00	14.50	368.00
H82J183DBV	30	.9	62.5	29.0	66.0	29.0	N/A	N/A	N/A	11.74	298.07	14.25	361.95	14.53	369.09
H82J183DBV	30	.9	62.5	29.0	66.0	29.0	N/A	N/A	N/A	11.74	298.07	14.25	361.95	14.53	369.09
H82J19*ABC	30	.9	58.5	26.5	62.0	28.0	35/370	145-175/330	3ARR3*3T*	11.74	298.07	14.25	361.95	14.53	369.09
H82J193DBL	30	.9	62.5	29.0	66.0	29.0	N/A	N/A	N/A	11.74	298.07	14.25	361.95	14.53	369.09
H82J193DBL	30	.9	62.5	29.0	66.0	29.0	N/A	N/A	N/A	14.53	369.09	14.25	361.95	11.74	298.07
H82J193DBV	30	.9	62.5	28.3	66.0	29.9	N/A	N/A	N/A	11.70	297.18	14.30	363.22	14.50	368.30
H82J193DBV	30	.9	62.5	29.0	66.0	29.0	N/A	N/A	N/A	11.74	298.07	14.25	361.95	14.53	369.09
H82J21*ABC	30	.9	61.0	28.0	64.5	29.0	35/370	145-175/330	3ARR3*3N*	12.24	310.77	14.75	374.65	15.03	381.79
H82J213ABH	30	.9	63.5	29.0	67.0	30.0	30/440	145-175/330	3ARR3*3V*	11.74	298.07	14.25	361.95	14.53	369.09
H82J213ABH	30	.9	63.5	29.0	67.0	30.0	35/370	145-175/250	3ARR3*3AP*	11.74	298.07	14.25	361.95	14.53	369.09
H82J213DBF	30	.9	62.5	29.0	66.0	29.0	N/A	N/A	N/A	11.74	298.07	14.25	361.95	14.53	369.09
H82J213DBL	30	.9	62.5	29.0	66.0	29.0	N/A	N/A	N/A	11.74	298.07	14.25	361.95	14.53	369.09
H82J213DBL	30	.9	62.5	29.0	66.0	29.0	N/A	N/A	N/A	11.74	298.07	14.25	361.95	14.53	369.09
H82J213DBV	30	.9	62.5	29.0	66.0	29.0	N/A	N/A	N/A	11.74	298.07	14.25	361.95	14.53	369.09
H82J213DBV	30	.9	62.5	29.0	66.0	29.0	N/A	N/A	N/A	11.74	298.07	14.25	361.95	14.53	369.09
H82J22*ABC	30	.9	61.0	28.0	64.5	29.0	35/370	145-175/330	3ARR3*3N*	12.24	310.77	14.75	374.65	15.03	381.79
H82J223ABH	30	.9	63.5	29.0	67.0	30.0	30/440	145-175/330	3ARR3*3V*	11.74	298.07	14.25	361.95	14.53	369.09
H82J223ABH	30	.9	63.5	29.0	67.0	30.0	35/370	145-175/250	3ARR3*3AP*	11.74	298.07	14.25	361.95	14.53	369.09
H82J223DBF	30	.9	62.5	29.0	66.0	29.0	N/A	N/A	N/A	11.74	298.07	14.25	361.95	14.53	369.09
H82J223DBL	30	.9	62.5	29.0	66.0	29.0	N/A	N/A	N/A	11.74	298.07	14.25	361.95	14.53	369.09
H82J223DBL	30	.9	62.5	29.0	66.0	29.0	N/A	N/A	N/A	11.74	298.07	14.25	361.95	14.53	369.09
H82J223DBV	30	.9	62.5	29.0	66.0	29.0	N/A	N/A	N/A	11.74	298.07	14.25	361.95	14.53	369.09
H82J223DBV	30	.9	62.5	29.0	66.0	29.0	N/A	N/A	N/A	11.74	298.07	14.25	361.95	14.53	369.09
H82J24*ABC	35	1.0	61.5	28.0	65.0	29.0	35/370	145-175/330	3ARR3*3N*	12.24	310.77	14.75	374.65	15.03	381.79
H82J26*ABC	35	1.0	69.0	31.0	72.5	33.0	40/370	189-227/250	3ARR3*3L*	12.24	310.77	14.75	374.65	15.03	381.79
H82J263ABH	35	1.0	69.0	31.3	72.5	33.9	35/440	145-175/330	3ARR3*3R*()	12.20	310.00	14.75	375.00	15.00	381.00
H82J263ABH	35	1.0	69.0	31.3	72.5	33.9	45/370	163-193/250	3ARR3*3AM*()	12.20	310.00	14.75	375.00	15.00	381.00
H82J263DBF	35	1.0	68.5	31.1	72.0	32.7	N/A	N/A	N/A	12.40	314.96	15.00	381.00	15.30	388.62
H82J263DBL	35	1.0	68.5	31.0	72.0	33.0	N/A	N/A	N/A	11.74	298.07	14.25	361.95	14.53	369.09
H82J263DBL	35	1.0	68.5	31.0	72.0	33.0	N/A	N/A	N/A	11.74	298.07	14.25	361.95	14.53	369.09
H82J263DBV	35	1.0	68.5	31.0	72.0	33.0	N/A	N/A	N/A	12.49	317.12	15.00	381.00	15.28	388.14
H82J263DBV	35	1.0	68.5	31.0	72.0	33.0	N/A	N/A	N/A	12.49	317.12	15.00	381.00	15.28	388.14

H82J *SERIES*

Model	Volts Phase Hz	@45/130 Capacity BTU/H	@45/130 Capacity WATTS	@45/130 Motor Input WATTS	@45/130 EER/COP BTU/WH	@45/130 EER/COP W/W	@45/100 Capacity BTU/H	@45/100 Motor Input WATTS	@45/100 EER BTU/WH	Electrical Data RLA	Electrical Data LRA	Electrical Data MCC	Displacement IN3/REV	Displacement CM3/REV
H82J *SERIES (R410A)*														
H82J27*ABC	208-230/1/60	27100	7940	2570	10.5	3.1	38300	2030	18.9	11.8	74	20.5	2.144	35.13
H82J273DBF	575/3/60	26900	7881	2560	10.5	3.1	38200	2020	18.9	3	28	6	2.144	35.13
H82J273DBL	200-220/3/50	22800	6673	2190	10.4	3.0	31800	1700	18.7	7.6	70	13.5	2.144	35.13
H82J273DBL	200-230/3/60	26900	7876	2560	10.5	3.1	38200	2020	18.9	7.7	68	13.5	2.144	35.13
H82J273DBV	380-415/3/50	22800	6673	2190	10.4	3.0	31800	1700	18.7	3.9	35	7	2.144	35.13
H82J273DBV	380-460/3/60	26900	7876	2560	10.5	3.1	38200	2020	18.9	3.7	34	7	2.144	35.13
H82J28*ABC	208-230/1/60	28100	8233	2680	10.5	3.1	39900	2110	18.9	13	74	23	2.219	36.36
H82J283ABH	265/1/60	28100	8233	2680	10.5	3.1	39900	2110	18.9	10.5	67	18	2.219	36.36
H82J283ABH	220-240/1/50	23900	7003	2310	10.3	3.0	33400	1790	18.7	11.2	64	17.9	2.219	36.36
H82J283DBF	575/3/60	28000	8204	2670	10.5	3.1	38700	2110	18.9	3.1	28	6	2.219	36.36
H82J283DBL	200-220/3/50	23800	6948	2280	10.4	3.0	33300	1770	18.8	7.9	70	14.5	2.219	36.36
H82J283DBL	200-230/3/60	28000	8214	2670	10.5	3.1	39700	2110	18.9	7.8	68	14.2	2.219	36.36
H82J283DBV	380-415/3/50	23800	6948	2280	10.4	3.0	33300	1770	18.8	4	35	7	2.219	36.36
H82J283DBV	380-460/3/60	28000	8214	2670	10.5	3.1	39700	2110	18.9	3.9	34	7	2.219	36.36
H82J29*ABC	208-230/1/60	29400	8614	2790	10.5	3.1	41600	2200	18.9	12.9	74	20	2.313	37.90
H82J293ABH	220-240/1/50	25100	7313	2430	10.3	3.0	35200	1880	18.7	11.4	64	18.4	2.313	37.90
H82J293ABH	265/1/60	29400	8614	2790	10.5	3.1	41600	2200	18.9	11.3	67	19.2	2.313	37.90
H82J293DBF	575/3/60	29200	8555	2780	10.5	3.1	41400	2200	18.9	3.2	28	6	2.313	37.90
H82J293DBL	200-220/3/50	25100	7313	2400	10.4	3.0	35100	1860	18.8	8.2	70	14.5	2.313	37.90
H82J293DBL	200-230/3/60	29200	8553	2780	10.5	3.1	41400	2200	18.9	8.3	68	14.5	2.313	37.90
H82J293DBV	380-415/3/50	25100	7313	2400	10.4	3.0	35100	1860	18.8	4.2	35	7	2.313	37.90
H82J293DBV	380-460/3/60	29220	8553	2780	10.5	3.1	41400	2200	18.9	4.1	34	7.6	2.313	37.90
H82J30*ABC	208-230/1/60	30800	9024	2920	10.5	3.1	43000	2280	18.9	13	88	25	2.369	38.83
H82J303DBF	575/3/60	30700	8995	2910	10.5	3.1	42800	2270	18.9	3.5	28	6	2.369	38.83
H82J303DBL	200-220/3/50	25600	7501	2460	10.4	3.0	35900	1910	18.8	8.3	70	14.7	2.369	38.83
H82J303DBL	200-230/3/60	30700	8995	2910	10.5	3.1	42800	2270	18.9	8.6	68	14.5	2.369	38.83
H82J303DBV	380-415/3/50	25600	7501	2460	10.4	3.0	35900	1910	18.8	4.3	33	7.4	2.369	38.83
H82J303DBV	380-460/3/60	30700	8995	2910	10.5	3.1	42800	2270	18.9	4.2	34	7.7	2.369	38.83
H82J32*ABC	208-230/1/60	32200	9434	3060	10.5	3.1	45000	2380	18.9	13.6	88	24.5	2.463	40.36
H82J323ABH	265/1/60	32200	9434	3060	10.5	3.1	45000	2380	18.9	12	67	19.8	2.463	40.36
H82J323ABH	220-240/1/50	27000	7911	2590	10.4	3.0	37800	2000	18.8	12.8	64	18.9	2.463	40.36
H82J323DBF	575/3/60	32100	9405	3050	10.5	3.1	44800	2370	18.9	3.5	28	6	2.463	40.36
H82J323DBL	200-220/3/50	27000	7907	2570	10.5	3.1	37700	2000	18.9	8.6	70	15	2.463	40.36
H82J323DBL	200-230/3/60	32100	9405	3050	10.5	3.1	44800	2370	18.9	8.8	68	14.5	2.463	40.36
H82J323DBV	380-415/3/50	27000	7907	2570	10.5	3.1	37700	2000	18.9	4.5	35	7.5	2.463	40.36
H82J323DBV	380-460/3/60	32100	9405	3050	10.5	3.1	44800	2370	18.9	4.4	34	8	2.463	40.36
H82J33*ABC	208-230/1/60	33400	9786	3190	10.4	3.0	47400	2490	19.1	14.2	84	23	2.614	42.83
H82J333DBF	575/3/60	32900	9640	3160	10.4	3.0	46700	2460	19.0	3.9	36	6.1	2.614	42.83
H82J333DBL	200-220/3/50	28400	8345	2820	10.1	3.0	40300	2190	18.4	11.1	94	17	2.614	42.83
H82J333DBL	200-230/3/60	32900	9629	3160	10.4	3.0	46700	2460	19.0	10	88	16.5	2.614	42.83
H82J333DBV	380-415/3/50	28400	8345	2820	10.1	3.0	40300	2190	18.4	5.1	43	8.6	2.614	42.83
H82J333DBV	380-460/3/60	32900	9629	3160	10.4	3.0	46700	2460	19.0	5	44	8.5	2.614	42.83
H82J35*ABC	208-230/1/60	34800	10196	3320	10.5	3.1	49500	2580	19.1	14.5	84	25	2.727	42.83

Data Subject to Revision

* In model number signifies models that are available with Bleed and Without Bleed
Example H82J35BABC -With Bleed
H82J353ABC - With out Bleed

Model	Oil Charge OZ	Oil Charge L	Weight Net Lbs	Weight Net Kg	Weight Ship Lbs	Weight Ship Kg	ELECTRICAL START COMPONENTS Run Capacitor MFD/VOLTS	ELECTRICAL START COMPONENTS Start Capacitor MFD/VOLTS	ELECTRICAL START COMPONENTS G.E. Relay	DIMENSIONS A IN	DIMENSIONS A MM	DIMENSIONS B IN	DIMENSIONS B MM	DIMENSIONS C IN	DIMENSIONS C MM
H82J27*ABC	35	1.0	69.0	31.0	72.5	33.0	40/370	189-227/250	3ARR3*3L*	12.24	310.77	14.75	374.65	15.03	381.79
H82J273DBF	35	1.0	68.5	31.0	72.0	33.0	N/A	N/A	N/A	12.49	317.12	15.00	381.00	15.28	388.14
H82J273DBL	35	1.0	68.5	31.0	72.0	33.0	N/A	N/A	N/A	12.49	317.12	15.00	381.00	15.28	388.14
H82J273DBL	35	1.0	68.5	31.0	72.0	33.0	N/A	N/A	N/A	12.49	317.12	15.00	381.00	15.28	388.14
H82J273DBV	35	1.0	68.5	31.0	72.0	33.0	N/A	N/A	N/A	12.49	317.12	15.00	381.00	15.28	388.14
H82J273DBV	35	1.0	68.5	31.0	72.0	33.0	N/A	N/A	N/A	12.49	317.12	15.00	381.00	15.28	388.14
H82J28*ABC	35	1.0	69.0	31.0	72.5	33.0	40/370	189-227/250	3ARR3*3L*	12.24	310.77	14.75	374.65	15.03	381.79
H82J283ABH	35	1.0	69.0	31.0	72.5	33.0	35/440	145-175/330	3ARR3*3R*	12.24	310.77	14.75	374.65	15.03	381.79
H82J283ABH	35	1.0	69.0	31.3	72.5	32.9	45/370	163-193/250	3ARR3*3AM*	12.20	309.88	14.80	375.92	15.00	381.00
H82J283DBF	35	1.0	68.5	31.0	72.0	33.0	N/A	N/A	N/A	12.49	317.12	15.00	381.00	15.28	388.14
H82J283DBL	35	1.0	68.5	31.0	72.0	33.0	N/A	N/A	N/A	12.49	317.12	15.00	381.00	15.28	388.14
H82J283DBL	35	1.0	68.5	31.0	72.0	33.0	N/A	N/A	N/A	12.49	317.12	15.00	381.00	15.28	388.14
H82J283DBV	35	1.0	68.5	31.0	72.0	33.0	N/A	N/A	N/A	12.49	317.12	15.00	381.00	15.28	388.14
H82J283DBV	35	1.0	68.5	31.0	72.0	33.0	N/A	N/A	N/A	12.49	317.12	15.00	381.00	15.28	388.14
H82J29*ABC	35	1.0	69.0	31.0	72.5	33.0	40/370	189-227/250	3ARR3*3L*	12.24	310.77	14.75	374.65	15.03	381.79
H82J293ABH	35	1.0	69.0	31.0	72.5	33.0	55/370	163-193/250	3ARR3*3AM*	12.24	310.77	14.75	374.65	15.03	381.79
H82J293ABH	35	1.0	69.0	31.0	72.5	33.0	35/370	145-175/330	3ARR3*3R*	12.24	310.77	14.75	374.65	15.03	381.79
H82J293DBF	35	1.0	68.5	31.0	72.0	33.0	N/A	N/A	N/A	12.49	317.12	15.00	381.00	15.28	388.14
H82J293DBL	35	1.0	68.5	31.0	72.0	33.0	N/A	N/A	N/A	12.49	317.12	15.00	381.00	15.28	388.14
H82J293DBL	35	1.0	68.5	31.0	72.0	33.0	N/A	N/A	N/A	12.49	317.12	15.00	381.00	15.28	388.14
H82J293DBV	35	1.0	68.5	31.0	72.0	33.0	N/A	N/A	N/A	12.49	317.12	15.00	381.00	15.28	388.14
H82J293DBV	35	1.0	68.5	31.0	72.0	33.0	N/A	N/A	N/A	12.49	317.12	15.00	381.00	15.28	388.14
H82J30*ABC	35	1.0	71.0	32.0	74.5	33.0	45/370	189-227/250	3ARR3*3S*	12.49	317.12	15.00	381.00	15.28	388.14
H82J303DBF	35	1.0	68.5	31.1	72.0	32.7	N/A	N/A	N/A	12.50	317.50	15.00	381.00	15.30	388.62
H82J303DBL	35	1.0	68.5	31.1	72.0	32.7	N/A	N/A	N/A	12.50	317.50	15.00	381.00	15.28	388.62
H82J303DBL	35	1.0	68.5	31.1	72.0	32.7	N/A	N/A	N/A	12.50	317.50	15.00	381.00	15.28	388.62
H82J303DBV	35	1.0	68.5	31.1	72.0	32.7	N/A	N/A	N/A	12.50	317.50	15.00	381.00	15.28	388.62
H82J303DBV	35	1.0	68.5	31.1	72.0	32.7	N/A	N/A	N/A	12.50	317.50	15.00	381.00	15.30	388.62
H82J32*ABC	35	1.0	71.0	32.0	74.5	33.0	45/370	189-227/250	3ARR3*3S*	12.49	317.12	15.00	381.00	15.28	388.14
H82J323ABH	35	1.0	69.0	31.3	72.5	32.9	35/370	145-175/330	N/A	12.20	309.88	14.80	375.92	15.03	381.79
H82J323ABH	35	1.0	69.0	31.3	72.5	32.9	55/370	163-193/250	3ARR3*3AM*	12.20	309.88	14.80	375.92	15.00	381.00
H82J323DBF	35	1.0	68.5	31.0	72.0	33.0	N/A	N/A	N/A	12.49	317.12	15.00	381.00	15.28	388.14
H82J323DBL	35	1.0	68.5	31.0	72.0	33.0	N/A	N/A	N/A	12.49	317.12	15.00	381.00	15.28	388.14
H82J323DBL	35	1.0	68.5	31.0	72.0	33.0	N/A	N/A	N/A	12.49	317.12	15.00	381.00	15.28	388.14
H82J323DBV	35	1.0	68.5	31.0	72.0	33.0	N/A	N/A	N/A	12.49	317.12	15.00	381.00	15.28	388.14
H82J323DBV	35	1.0	68.5	31.0	72.0	33.0	N/A	N/A	N/A	12.49	317.12	15.00	381.00	15.28	388.14
H82J33*ABC	40	1.1	88.5	40.0	91.5	42.0	40/440	189-227/250	3ARR3*3S*	14.06	357.20	15.59	396.09	15.88	403.23
H82J333DBF	40	1.1	85.5	39.0	88.5	40.0	N/A	N/A	N/A	14.06	357.20	15.59	366.09	15.88	403.23
H82J333DBL	40	1.1	85.5	39.0	88.5	40.0	N/A	N/A	N/A	14.06	357.20	15.59	366.09	15.88	403.23
H82J333DBL	40	1.1	85.5	39.0	88.5	40.0	N/A	N/A	N/A	12.49	317.12	15.00	381.00	15.28	388.14
H82J333DBV	40	1.1	68.5	31.0	72.0	33.0	N/A	N/A	N/A	14.06	357.20	15.59	366.09	15.88	403.23
H82J333DBV	40	1.1	85.5	39.0	88.5	40.0	N/A	N/A	N/A	14.06	357.20	15.59	366.09	15.88	403.23
H82J35*ABC	40	1.1	88.5	40.0	91.5	42.0	40/440	189-227/250	3ARR3*3S*	14.06	357.20	15.59	396.09	15.88	403.23

H82J *SERIES*

Model	Volts Phase Hz	@45/130 Capacity BTU/H	@45/130 Capacity WATTS	@45/130 Motor Input WATTS	@45/130 EER/COP BTU/WH	@45/130 EER/COP W/W	@45/100 Capacity BTU/H	@45/100 Motor Input WATTS	@45/100 EER BTU/WH	Electrical Data RLA	Electrical Data LRA	Electrical Data MCC	Displacement IN3/REV	Displacement CM3/REV
H82J *SERIES* (R410A)														
H82J353DBF	575/3/60	34500	10108	3300	10.5	3.1	49000	2570	19.1	4	36	7.5	2.727	44.68
H82J353DBL	200-220/3/50	29700	8727	2920	10.2	3.0	42100	2270	18.5	11.2	94	17.6	2.727	44.68
H82J353DBL	200-230/3/60	34500	10152	3300	10.5	3.1	49000	2570	19.1	10.2	88	18.5	2.727	44.68
H82J353DBV	380-415/3/50	29700	8727	2920	10.2	3.0	42100	2720	18.5	5.3	44	8.1	2.727	44.68
H82J353DBV	380-460/3/60	34500	10152	3300	10.5	3.1	49000	2570	19.1	5.1	44	8.1	2.727	44.68
H82J37*ABC	208-230/1/60	37600	11016	3600	10.4	3.0	53400	2810	19.0	15.7	84	24.5	2.915	47.76
H82J373ABH	265/1/60	37400	10958	3600	10.4	3.0	53100	2800	19.0	13.8	81	25.5	2.915	47.76
H82J373ABH	220-240/1/50	31200	9111	2990	10.4	3.0	44300	2330	19.0	5.1	80	23.1	2.915	47.76
H82J373DBF	575/3/60	37400	10958	3600	10.4	3.0	53100	2800	19.0	4.4	36	7	2.915	47.76
H82J373DBL	200-220/3/50	32700	9564	3200	10.2	3.0	46400	2490	18.6	11.3	94	17.4	2.915	47.76
H82J373DBL	200-230/3/60	37400	10970	3600	10.4	3.0	53100	2800	19.0	11	88	17.5	2.915	47.76
H82J373DBV	380-415/3/50	32700	9564	3200	10.2	3.0	46400	2490	18.6	5.8	43	8.1	2.915	47.76
H82J373DBV	380-460/3/60	37400	10970	3600	10.4	3.0	53100	2800	19.0	5.6	44	8	2.915	47.76
H82J37MABC	208-230/1/60	37800	11075	3650	10.4	3.0	53000	2820	18.8	15.7	84	26.0	2.915	47.76
H82J37MDBF	575/3/60	36700	10753	3520	10.4	3.0	52900	2850	18.6	4.4	36	7.0	2.915	47.76
H82J37MDBL	200-230/3/60	36300	10636	3450	10.5	3.1	52200	2770	18.9	11.0	88	17.0	2.915	47.76
H82J37MDBL	200-220/3/50	31600	9259	3090	10.2	3.0	44300	2410	18.4	12.0	94	17.0	2.915	47.76
H82J37MDBV	380-460/3/60	36300	10636	3450	10.5	3.1	52200	2770	18.9	5.4	44	9.2	2.915	47.76
H82J37MDBV	380-415/3/50	31600	9259	3090	10.2	3.0	44300	2410	18.4	5.4	43	9.4	2.915	47.76
H82J40*ABC	208-230/1/60	39700	11631	3750	10.6	3.1	55600	2930	19.0	17.9	102	29	3.028	53.74
H82J403DBF	575/3/60	39600	11603	3740	10.6	3.1	55300	2910	19.0	4.4	36	5.5	3.028	53.74
H82J403DBL	200-220/3/50	33600	9876	3210	10.5	3.1	47000	2510	18.8	12	90	18.4	3.028	53.74
H82J403DBL	200-230/3/60	39600	11616	3740	10.6	3.1	55300	2910	19.0	11.3	88	19	3.028	53.74
H82J403DBV	380-415/3/50	33600	9876	3210	10.5	3.1	47000	2510	18.8	5.7	43	8.5	3.028	53.74
H82J403DBV	380-460/3/60	39600	11616	3740	10.6	3.1	55300	2910	19.0	5.5	44	9	3.028	53.74
H82J42*ABC	208-230/1/60	42100	12335	3950	10.7	3.1	58200	3060	19.0	18.3	102	27	3.116	51.06
H82J423DBF	575/3/60	41300	12101	3890	10.6	3.1	58100	3060	19.0	4.6	36	7.3	3.116	51.06
H82J423DBL	200-220/3/50	35800	10489	3370	10.6	3.1	48700	2580	18.9	12.7	90	17	3.116	51.06
H82J423DBL	200-230/3/60	41300	12101	3920	10.5	3.1	58500	3090	18.9	11.8	88	17	3.116	51.06
H82J423DBV	380-415/3/50	35800	10489	3370	10.6	3.1	48700	2580	18.9	6	45	10.1	3.116	51.06
H82J423DBV	380-460/3/60	41300	12101	3920	10.5	3.1	58500	3090	18.9	5.9	44	11	3.116	51.06
H82J44*ABC	208-230/1/60	44000	12891	4170	10.6	3.1	60400	3180	19.0	18.5	105	31	3.274	53.64
H82J443DBF	575/3/60	43300	12687	4110	10.5	3.1	60500	3190	19.0	4.7	36	6.8	3.274	53.64
H82J443DBL	200-220/3/50	37600	11017	3630	10.4	3.0	51600	2740	18.8	13.1	92	21.6	3.274	53.64
H82J443DBL	200-230/3/60	43300	12687	4110	10.5	3.1	60500	3190	19.0	12.5	88	22	3.274	53.64
H82J443DBV	380-415/3/50	37600	11017	3630	10.4	3.0	51600	2740	18.8	6.4	45	10.1	3.274	53.64
H82J443DBV	380-460/3/60	43300	12687	4110	10.5	3.1	60500	3190	19.0	6.1	44	11	3.274	53.64
H82J46*ABC	208-230/1/60	45800	13419	4350	10.5	3.1	63500	3340	19.0	20.2	105	33	3.380	55.38
H82J463DBF	575/3/60	45400	13302	4270	10.6	3.1	62800	3320	18.9	5.1	36	7.5	3.380	55.38
H82J463DBL	200-220/3/50	39400	11544	3800	10.4	3.0	53600	2840	18.8	13.1	92	21.1	3.380	55.38
H82J463DBL	200-230/3/60	45400	13302	4270	10.6	3.1	62800	3320	18.9	12.9	88	22	3.380	55.38
H82J463DBV	380-415/3/50	39400	11544	3800	10.4	3.0	53600	2840	18.8	6.9	54	11.1	3.380	55.38
H82J463DBV	380-460/3/60	45400	13302	4270	10.6	3.1	62800	3320	18.9	6.7	55	12	3.380	55.38

Data Subject to Revision

* In model number signifies models that are available with Bleed and Without Bleed
Example H82J35BABC -With Bleed
H82J353ABC - With out Bleed

Model	Oil Charge OZ	Oil Charge L	Weight Net Lbs	Weight Net Kg	Weight Ship Lbs	Weight Ship Kg	ELECTRICAL START COMPONENTS Run Capacitor MFD/VOLTS	ELECTRICAL START COMPONENTS Start Capacitor MFD/VOLTS	ELECTRICAL START COMPONENTS G.E. Relay	DIMENSIONS A IN	DIMENSIONS A MM	DIMENSIONS B IN	DIMENSIONS B MM	DIMENSIONS C IN	DIMENSIONS C MM
H82J353DBF	40	1.1	85.5	39.0	88.5	40.0	N/A	N/A	N/A	14.06	357.20	15.59	366.09	15.88	403.23
H82J353DBL	40	1.1	81.5	37.0	84.5	38.0	N/A	N/A	N/A	14.06	357.20	15.59	366.09	15.88	403.23
H82J353DBL	40	1.1	81.5	37.0	84.5	38.0	N/A	N/A	N/A	14.06	357.20	15.59	366.09	15.88	403.23
H82J353DBV	40	1.1	85.5	39.0	88.5	40.0	N/A	N/A	N/A	14.06	357.20	15.59	366.09	15.88	403.23
H82J353DBV	40	1.1	85.5	39.0	88.5	40.0	N/A	N/A	N/A	14.06	357.20	15.59	366.09	15.88	403.23
H82J37*ABC	40	1.1	88.5	40.0	91.5	42.0	45/440	189-227/250	3ARR3*3S*	14.06	357.20	15.59	396.09	15.88	403.23
H82J373ABH	40	1.1	88.5	40.0	91.5	42.0	50/370	161-193/250	3AN	14.06	357.20	15.59	396.09	15.88	403.23
H82J373ABH	40	1.1	88.5	39.0	91.5	42.0	50/370	161-193/250	3ARR3*3AN*	14.06	357.20	15.59	366.09	15.88	403.23
H82J373DBF	40	1.1	85.5	39.0	88.5	40.0	N/A	N/A	N/A	14.06	357.20	15.59	366.09	15.88	403.23
H82J373DBL	40	1.1	85.5	39.0	88.5	40.0	N/A	N/A	N/A	14.06	357.20	15.59	366.09	15.88	403.23
H82J373DBL	40	1.1	85.5	39.0	88.5	40.0	N/A	N/A	N/A	14.06	357.20	15.59	366.09	15.88	403.23
H82J373DBV	40	1.1	85.5	39.0	88.5	40.0	N/A	N/A	N/A	14.06	357.20	15.59	366.09	15.88	403.23
H82J373DBV	40	1.1	85.5	39.0	88.5	40.0	N/A	N/A	N/A	14.06	357.20	15.59	366.09	15.88	403.23
H82J37MABC	40	1.1	84.0	38.1	87.0	39.5	45/370	189-227/250	3ARR3*3S*()	14.10	358.00	15.60	396.00	15.90	404.00
H82J37MDBF	40	1.1	81.5	37.0	84.5	38.3	N/A	N/A	N/A	14.10	358.00	15.60	396.00	15.90	404.00
H82J37MDBL	40	1.1	82.0	37.2	85.0	38.5	N/A	N/A	N/A	14.10	358.00	15.60	396.00	15.90	404.00
H82J37MDBL	40	1.1	82.0	37.2	85.0	38.5	N/A	N/A	N/A	14.10	358.00	15.60	396.00	15.90	404.00
H82J37MDBV	40	1.1	82.0	37.2	85.0	38.5	N/A	N/A	N/A	14.10	358.00	15.60	396.00	15.90	404.00
H82J37MDBV	40	1.1	82.0	37.2	85.0	38.5	N/A	N/A	N/A	14.10	358.00	15.60	396.00	15.90	404.00
H82J40*ABC	40	1.1	88.5	40.0	91.5	42.0	55/370	189-227/250	3ARR3*3S*	14.06	357.20	15.59	396.09	15.88	403.23
H82J403DBF	40	1.1	85.5	39.0	88.5	40.0	N/A	N/A	N/A	14.06	357.20	15.59	366.09	15.88	403.23
H82J403DBL	40	1.1	85.5	39.0	88.5	40.0	N/A	N/A	N/A	14.06	357.20	15.59	366.09	15.88	403.23
H82J403DBL	40	1.1	85.5	39.0	88.5	40.0	N/A	N/A	N/A	14.06	357.20	15.59	366.09	15.88	403.23
H82J403DBV	40	1.1	85.5	39.0	88.5	40.0	N/A	N/A	N/A	14.06	357.20	15.59	366.09	15.88	403.23
H82J403DBV	40	1.1	85.5	39.0	88.5	40.0	N/A	N/A	N/A	14.06	357.20	15.59	366.09	15.88	403.23
H82J42*ABC	40	1.1	88.5	40.0	91.5	42.0	60/370	216-259/330	3ARR3*3S*	14.06	357.20	15.59	396.09	15.88	403.23
H82J423DBF	40	1.1	85.5	39.0	88.5	40.0	N/A	N/A	N/A	14.06	357.20	15.59	366.09	15.88	403.23
H82J423DBL	40	1.1	81.5	37.0	84.5	38.3	N/A	N/A	N/A	14.00	355.60	15.60	396.24	15.88	403.86
H82J423DBL	40	1.1	81.5	37.0	84.5	38.3	N/A	N/A	N/A	14.00	355.60	15.60	396.24	15.90	403.86
H82J423DBV	40	1.1	81.5	37.0	84.5	38.3	N/A	N/A	N/A	14.10	358.14	15.60	396.24	15.88	403.23
H82J423DBV	40	1.1	81.5	37.0	84.5	38.3	N/A	N/A	N/A	14.00	355.60	15.60	396.24	15.90	403.86
H82J44*ABC	40	1.1	88.5	40.0	91.5	42.0	60/370	216-259/330	3ARR3*3S*	14.06	357.20	15.59	396.09	15.88	403.23
H82J443DBF	40	1.1	81.5	37.0	84.5	38.3	N/A	N/A	N/A	14.10	358.14	15.60	396.24	15.90	403.86
H82J443DBL	40	1.1	81.5	37.0	84.5	38.3	N/A	N/A	N/A	14.10	358.14	15.60	396.24	15.90	403.86
H82J443DBL	40	1.1	81.5	37.0	84.5	38.3	N/A	N/A	N/A	14.10	358.14	15.60	396.24	15.90	403.86
H82J443DBV	40	1.1	81.5	37.0	84.5	38.3	N/A	N/A	N/A	14.10	358.14	15.60	396.24	15.90	403.86
H82J443DBV	40	1.1	81.5	37.0	84.5	38.3	N/A	N/A	N/A	14.10	358.14	15.60	396.24	15.90	403.86
H82J46*ABC	40	1.1	84.5	38.3	87.5	39.7	60/370	216-259/330	3ARR3*3S*	14.10	358.14	15.60	396.24	15.90	403.86
H82J463DBF	40	1.1	81.5	37.0	84.5	38.3	N/A	N/A	N/A	14.10	358.14	15.60	396.24	15.90	403.86
H82J463DBL	40	1.1	81.5	37.0	84.5	38.3	N/A	N/A	N/A	14.10	358.14	15.60	396.24	15.90	403.86
H82J463DBL	40	1.1	81.5	37.0	84.5	38.3	N/A	N/A	N/A	14.10	358.14	15.60	396.24	15.90	403.86
H82J463DBV	40	1.1	83.5	37.9	86.5	39.2	N/A	N/A	N/A	14.30	363.22	15.80	401.32	16.20	411.48
H82J463DBV	40	1.1	83.5	37.9	86.5	39.2	N/A	N/A	N/A	14.30	363.22	15.80	401.32	16.20	411.48

H82J *SERIES*

Model	Volts Phase Hz	@45/130 Capacity BTU/H	@45/130 Capacity WATTS	@45/130 Motor Input WATTS	@45/130 EER/COP BTU/WH	@45/130 EER/COP W/W	@45/100 Capacity BTU/H	@45/100 Motor Input WATTS	@45/100 EER BTU/WH	Electrical Data RLA	Electrical Data LRA	Electrical Data MCC	Displacement IN3/REV	Displacement CM3/REV
H82J *SERIES* (R410A)														
H82J48*ABC	208-230/1/60	48000	14064	4520	10.6	3.1	66400	3560	18.7	21.4	130	35.6	3.519	57.66
H82J483DBF	575/3/60	47600	13947	4490	10.6	3.1	65500	3520	18.6	5.4	43	8.7	3.519	57.66
H82J483DBL	200-220/3/50	41100	12042	3980	10.3	3.0	55800	3030	18.4	15.1	111	21.3	3.519	57.66
H82J483DBL	200-230/3/60	47600	13947	4490	10.6	3.1	65500	3520	18.6	13.6	110	21.7	3.519	57.66
H82J483DBV	380-415/3/50	41100	12042	3980	10.3	3.0	55800	3030	18.4	7	54	11.4	3.519	57.66
H82J483DBV	380-460/3/60	47600	13947	4490	10.6	3.1	65500	3520	18.6	6.7	55	11.5	3.519	57.66
H82J50*ABC	208-230/1/60	50300	14738	4750	10.6	3.1	68500	3680	18.6	22.5	130	36	3.669	60.11
H82J503DBF	575/3/60	49800	14591	4690	10.6	3.1	68200	3630	18.8	5.6	43	8.9	3.669	60.11
H82J503DBL	200-220/3/50	42900	12570	4150	10.4	3.0	58600	3170	18.5	15.3	111	23.1	3.669	60.11
H82J503DBL	200-230/3/60	49800	14591	4690	10.6	3.1	68200	3630	18.8	14.3	110	24.6	3.669	60.11
H82J503DBV	380-415/3/50	42900	12570	4150	10.4	3.0	58600	3170	18.5	7.3	54	11.7	3.669	60.11
H82J503DBV	380-460/3/60	49800	14591	4690	10.6	3.1	68200	3630	18.8	7.1	55	11.5	3.669	60.11
H82J50MDBV	380-415/3/50	41900	12277	4100	10.2	3.0	57000	3110	18.3	7.3	54	11.7	3.669	60.11
H82J50MDBV	380-460/3/60	48500	14211	4690	10.3	3.0	67200	3750	17.9	7.1	55	11.5	3.669	60.11

Data Subject to Revision

* In model number signifies models that are available with Bleed and Without Bleed
Example H82J35BABC -With Bleed
H82J353ABC - With out Bleed

Model	Oil Charge OZ	Oil Charge L	Weight Net Lbs	Weight Net Kg	Weight Ship Lbs	Weight Ship Kg	ELECTRICAL START COMPONENTS Run Capacitor MFD/VOLTS	ELECTRICAL START COMPONENTS Start Capacitor MFD/VOLTS	ELECTRICAL START COMPONENTS G.E. Relay	DIMENSIONS A IN	DIMENSIONS A MM	DIMENSIONS B IN	DIMENSIONS B MM	DIMENSIONS C IN	DIMENSIONS C MM
H82J48*ABC	40	1.1	87.0	39.5	90.0	40.8	60/370	189-227/330	3ARR3*3S*	14.30	363.22	15.80	401.32	16.20	411.48
H82J483DBF	40	1.1	84.4	38.3	86.5	39.2	N/A	N/A	N/A	14.30	363.22	15.80	401.32	16.20	411.48
H82J483DBL	40	1.1	83.5	37.9	86.5	39.2	N/A	N/A	N/A	14.30	363.22	15.80	401.32	16.20	411.48
H82J483DBL	40	1.1	83.5	37.9	86.5	39.2	N/A	N/A	N/A	14.30	363.22	15.80	401.32	16.20	411.48
H82J483DBV	40	1.1	83.5	37.9	86.5	39.2	N/A	N/A	N/A	14.30	363.22	15.80	401.32	16.20	411.48
H82J483DBV	40	1.1	83.5	37.9	86.5	39.2	N/A	N/A	N/A	14.30	363.22	15.80	401.32	16.20	411.48
H82J50*ABC	40	1.1	87.0	39.5	90.0	40.8	60/370	189-227/330	3ARR3*3S*	14.30	363.22	15.80	401.32	16.20	411.48
H82J503DBF	40	1.1	84.4	38.3	86.5	39.2	N/A	N/A	N/A	14.30	363.22	15.80	401.32	16.20	411.48
H82J503DBL	40	1.1	83.5	37.9	86.5	39.2	N/A	N/A	N/A	14.30	363.22	15.30	388.62	15.70	398.78
H82J503DBL	40	1.1	83.5	37.9	86.5	39.2	N/A	N/A	N/A	14.30	363.22	15.30	388.62	15.70	398.78
H82J503DBV	40	1.1	83.5	37.9	86.5	39.2	N/A	N/A	N/A	14.30	363.22	15.80	401.32	16.20	411.48
H82J503DBV	40	1.1	83.5	37.9	86.5	39.2	N/A	N/A	N/A	14.30	363.22	15.80	401.32	16.20	411.48
H82J50MDBV	40	1.1	83.5	37.9	86.5	39.2	N/A	N/A	N/A	14.30	363.22	15.80	401.32	16.10	408.94
H82J50MDBV	40	1.1	83.5	37.9	86.5	39.2	N/A	N/A	N/A	14.30	363.22	15.80	401.32	16.10	408.94

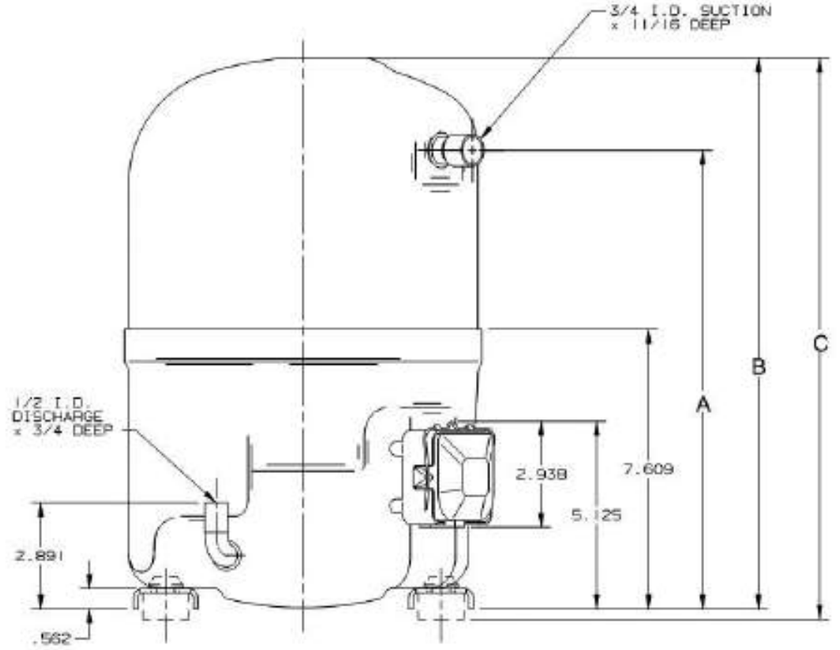

H82J

H71J *SERIES*

Model	Volts Phase Hz	@45/130 Capacity BTU/H	@45/130 Capacity WATTS	@45/130 Motor Input WATTS	@45/130 EER/COP BTU/WH	@45/130 EER/COP W/W	@45/100 Capacity BTU/H	@45/100 Motor Input WATTS	@45/100 EER BTU/WH	Electrical Data RLA	Electrical Data LRA	Electrical Data MCC	Displacement IN3/REV	Displacement CM3/REV
H71J *SERIES* (R407C)														
H71J193ABK	220-240/1/50	14,400	4219	1420	10.2	3.0	19900	1140	17.5	6.5	37	11.5	2.172	35.59
H71J223ABK	220-240/1/50	17,900	5245	1710	10.5	3.1	25100	1360	18.5	8	48	13	2.539	41.60
H71J233DBL	200-220/3/50	19,400	5684	1770	10.9	3.2	27100	1440	18.8	7	64	12	2.614	42.83
H71J233DBV	380-415/3/50	19,400	5684	1770	10.9	3.2	27100	1440	18.8	3.3	30	5.6	2.614	42.83
H71J243DBV	380-415/3/50	19,400	5684	1830	10.6	3.1	27000	1490	18.2	3.4	30	6	2.708	44.37
H71J253DBV	380-415/3/50	20,000	5860	1850	10.8	3.2	27800	1480	18.8	3.5	30	6.1	2.765	45.30
H71J273ABC	208-230/1/60	25,400	7442	2330	10.9	3.2	34600	1840	18.8	10.6	61	18	2.915	47.76
H71J273ABK	220-240/1/50	22,400	6563	2030	11.0	3.2	30200	1590	18.9	10	64	18	2.915	47.76
H71J273DBL	200-220/3/50	22,300	6534	2060	10.8	3.2	29700	1630	18.3	7.2	64	13.5	2.915	47.76
H71J273DBV	380-415/3/50	22,300	6534	2060	10.8	3.2	29700	1630	18.3	3.2	30	6.5	2.915	47.76
H71J323ABK	220-240/1/50	25,300	7413	2300	11.0	3.2	33500	1780	18.8	10.7	65	19	3.242	53.12
H71J323DBL	200-220/3/50	25,600	7501	2310	11.1	3.3	34000	1810	18.8	8.4	76	16	3.242	53.12
H71J323DBV	380-415/3/50	24,900	7296	2240	11.1	3.3	33600	1770	19.0	5.2	45	9	3.242	53.12
H71J343ABC	208-230/1/60	33,300	9757	2970	11.2	3.3	43600	2310	18.9	13	78	25.1	3.531	57.85
H71J343ABK	220-240/1/50	27,600	8087	2470	11.2	3.3	36700	1940	18.9	14.2	65	19	3.531	57.85
H71J343DBL	200-220/3/50	27,600	8087	2470	11.2	3.3	36700	1940	18.9	9	76	15	3.531	57.85
H71J343DBV	380-415/3/50	27,600	8087	2470	11.2	3.3	36700	1940	18.9	5.2	45	8.4	3.531	57.85
H71J363DBL	200-220/3/50	28,900	8468	2660	10.9	3.2	38100	2050	18.6	9.5	76	16	3.669	60.11
H71J363DBL	200-230/3/60	33,400	9786	3050	10.9	3.2	44000	2350	18.7	9.2	72	15	3.669	60.11
H71J363DBV	380-415/3/50	29,000	8497	2600	11.2	3.3	39800	2050	19.4	4.7	45	7.9	3.669	60.11
H71J363DBV	380-460/3/60	33,400	9786	3050	10.9	3.2	44000	2350	18.7	5.1	45	8	3.669	60.11
H71J383ABK	220-240/1/50	31,300	9171	2800	11.2	3.3	41500	2140	19.4	13.3	80	22	3.883	63.62
H71J383DBL	200-220/3/50	31,200	9142	2840	11.0	3.2	41100	2220	18.5	11	90	18	3.87	63.41
H71J383DBV	380-415/3/50	31,200	9142	2780	11.2	3.3	41400	2130	19.4	5	42	8	3.883	63.62
H71J433ABC	208-230/1/60	41,600	12189	3660	11.4	3.3	54000	2920	18.5	17	102	30	4.310	70.62
H71J433ABK	220-240/1/50	34,500	10109	3140	11.0	3.2	45500	2420	18.8	15.1	80	25	4.310	70.62
H71J433DBL	200-220/3/50	34,500	10109	3200	10.8	3.2	45300	2520	18.0	11.6	90	19	4.310	70.62
H71J433DBL	200-230/3/60	40,200	11779	3670	11.0	3.2	52900	2900	18.3	11.1	88	18	4.310	70.62
H71J433DBV	380-415/3/50	34,700	10167	3130	11.1	3.3	45700	2410	18.9	6	42	8.5	4.310	70.62
H71J433DBV	380-460/3/60	41,100	12042	3880	10.6	3.1	53800	2900	18.5	5.7	42	9	4.310	70.62
H71J443ABC	208-230/1/60	43,700	12804	3980	11.0	3.2	56400	3090	18.3	17.5	102	31.5	4.417	72.37
H71J493DBE	380-415/3/50	38,400	11251	3510	10.9	3.2	50400	2660	18.9	6.1	44	9.2	4.712	77.20

Data Subject to Revision

Model	Oil Charge OZ	Oil Charge L	Weight Net Lbs	Weight Net Kg	Weight Ship Lbs	Weight Ship Kg	ELECTRICAL START COMPONENTS Run Capacitor MFD/VOLTS	Start Capacitor MFD/VOLTS	G.E. Relay	DIMENSIONS A IN	A MM	B IN	B MM	C IN	C MM
H71J193ABK	35	1.0	59.0	26.8	62.0	28.1	35/370	145-175/330	3ARR3*24AV*	12.98	329.69	13.25	336.55	13.53	343.66
H71J223ABK	35	1.0	61.0	27.7	64.0	29.0	35/370	145-175/250	3ARR3*3AP*	11.73	297.94	13.75	349.25	14.03	356.36
H71J233DBL	45	1.2	71.0	32.2	74.0	33.6	N/A	N/A	N/A	14.92	378.97	15.25	387.35	15.53	394.46
H71J233DBV	45	1.2	71.0	32.2	74.0	33.6	N/A	N/A	N/A	14.92	378.97	15.25	387.35	15.53	394.46
H71J243DBV	35	1.0	61.5	27.9	65.0	29.5	N/A	N/A	N/A	11.73	297.94	13.75	349.25	14.03	356.36
H71J253DBV	45	1.2	71.0	32.2	74.0	33.6	N/A	N/A	N/A	14.92	378.97	15.25	387.35	15.53	394.46
H71J273ABC	45	1.2	72.0	32.7	75.0	34.0	30/370	145-175/250	3ARR3*3S*	14.92	378.97	15.25	387.35	15.53	394.46
H71J273ABK	45	1.2	73.0	33.1	76.0	34.5	45/370	161-193/250	3ARR3*3AM*	15.17	385.32	15.50	393.70	15.78	400.81
H71J273DBL	45	1.2	71.0	32.2	74.5	33.8	N/A	N/A	N/A	14.92	378.97	15.25	387.35	15.53	394.46
H71J273DBV	45	1.2	71.0	32.2	74.5	33.8	N/A	N/A	N/A	14.92	378.97	15.25	387.35	15.53	394.46
H71J323ABK	45	1.2	73.0	33.1	76.0	34.5	50/370	161-193/250	3ARR3*3AM*	15.17	385.32	15.50	393.70	15.78	400.81
H71J323DBL	45	1.2	71.0	32.2	74.0	33.6	N/A	N/A	N/A	15.17	385.32	15.50	393.70	15.78	400.81
H71J323DBV	45	1.2	72.4	32.8	75.9	34.4	N/A	N/A	N/A	15.17	385.32	15.50	393.70	15.78	400.81
H71J343ABC	45	1.2	73.0	33.1	76.0	34.5	45/370	189-227/330	3ARR3*3S*	13.97	354.84	15.50	393.70	15.78	400.81
H71J343ABK	45	1.2	73.0	33.1	76.0	34.5	50/370	161-193/250	3ARR3*3AM*	15.17	385.32	15.50	393.70	15.78	400.81
H71J343DBL	45	1.2	71.0	32.2	74.0	33.6	N/A	N/A	N/A	15.17	385.32	15.50	393.70	15.78	400.81
H71J343DBV	45	1.2	71.0	32.2	74.0	33.6	N/A	N/A	N/A	15.17	385.32	15.50	393.70	15.78	400.81
H71J363DBL	45	1.2	71.0	32.2	74.0	33.6	N/A	N/A	N/A	15.20	386.08	15.50	393.70	15.78	400.81
H71J363DBL	45	1.2	71.0	32.2	74.0	33.6	N/A	N/A	N/A	15.20	386.08	15.50	393.70	15.78	400.81
H71J363DBV	45	1.2	71.0	32.2	74.0	33.6	N/A	N/A	N/A	15.17	385.32	15.50	393.70	15.78	400.81
H71J363DBV	45	1.2	71.0	32.2	74.0	33.6	N/A	N/A	N/A	15.17	385.32	15.50	393.70	15.78	400.81
H71J383ABK	45	1.2	77.5	35.2	81.0	36.7	50/370	161-193/250v	3ARR3*3AN*	15.42	391.67	15.75	400.05	16.03	407.16
H71J383DBL	45	1.2	73.5	33.3	76.5	34.7	N/A	N/A	N/A	15.42	391.67	15.75	400.05	16.03	407.16
H71J383DBV	45	1.2	72.0	32.7	75.0	34.0	N/A	N/A	N/A	15.42	391.67	15.75	400.05	16.03	407.16
H71J433ABC	45	1.2	75.0	34.0	78.0	35.4	50/370	216-259/330	3ARR3*3S*	15.42	391.67	15.75	400.05	16.03	407.16
H71J433ABK	45	1.2	75.0	34.0	78.0	35.4	50/370	216-259/330	3ARR3*3S*	15.42	391.67	15.75	400.05	16.03	407.16
H71J433DBL	45	1.2	73.5	33.3	76.5	34.7	N/A	N/A	N/A	15.42	391.67	15.75	400.05	16.03	407.16
H71J433DBL	45	1.2	73.5	33.3	76.5	34.7	N/A	N/A	N/A	15.42	391.67	15.75	400.05	16.03	407.16
H71J433DBV	45	1.2	72.0	32.7	75.0	34.0	N/A	N/A	N/A	15.42	391.67	15.75	400.05	16.03	407.16
H71J433DBV	45	1.2	72.0	32.7	75.0	34.0	N/A	N/A	N/A	15.42	391.67	15.75	400.05	16.03	407.16
H71J443ABC	45	1.2	75.0	34.0	78.0	35.4	65/370	216-259/330	3ARR3*3S*	14.22	361.19	15.75	400.05	16.03	407.16
H71J493DBE	45	1.2	72.0	32.7	75.0	34.0	N/A	N/A	N/A	15.42	391.67	15.75	400.05	16.03	407.16

H71J

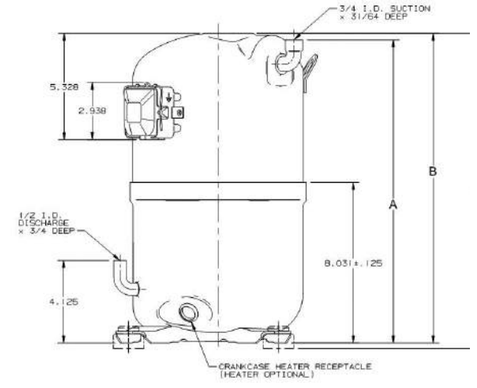

H22A *SERIES*

Model	Volts Phase Hz	@45/130 Capacity BTU/H	@45/130 Capacity WATTS	@45/130 Motor Input WATTS	@45/130 EER/COP BTU/WH	@45/130 EER/COP W/W	@45/100 Capacity BTU/H	@45/100 Motor Input WATTS	@45/100 EER BTU/WH	Electrical Data RLA	Electrical Data LRA	Electrical Data MCC	Displacement IN3/REV	Displacement CM3/REV
H22A *SERIES* (R22)														
H22A503ABC	208-230/1/60	49000	14378	4890	10.0	2.9	64000	3980	16.1	22.3	138	40	5.202	85.26
H22A503DBE	460/3/60	49000	14357	4890	10.0	2.9	64000	3980	16.1	6.8	53	12.5	5.202	85.26
H22A503DBE	380-415/3/50	42200	12364	4210	10.0	2.9	55100	3420	16.1	6.6	53	12.5	5.202	85.26
H22A503DBF	575/3/60	49000	14357	4890	10.0	2.9	64000	3980	16.1	5.5	43	9	5.202	85.26
H22A503DBL	200-230/3/60	49000	14357	4890	10.0	2.9	64000	3980	16.1	13.7	106	25	5.202	85.26
H22A503DBL	200-220/3/50	42400	12423	4310	9.8	2.9	55400	3510	15.8	14.7	106	25	5.202	85.26
H22A543ABC	208-230/1/60	53400	15669	5340	10.0	2.9	68400	4460	15.3	24.4	138	45	5.655	92.66
H22A543DBE	460/3/60	53400	15646	5250	10.2	3.0	68400	4350	15.7	7.5	53	14	5.655	92.66
H22A543DBE	380-415/3/50	46000	13478	4460	10.3	3.0	58900	3680	16.0	7.2	53	12.5	5.655	92.66
H22A543DBF	575/3/60	53400	15646	5250	10.2	3.0	68400	4350	15.7	6	43	10	5.655	92.66
H22A543DBL	200-230/3/60	53400	15646	5250	10.2	3.0	68400	4350	15.7	14.5	106	27	5.655	92.66
H22A543DBL	200-220/3/50	46600	13654	4610	10.1	3.0	59700	3810	15.7	15.1	106	25	5.655	92.66
H22A563DBF	575/3/60	55600	16291	5360	10.4	3.0	71300	4460	16.0	6.4	50	12	5.818	95.36
H22A563DBL	200-230/3/60	55600	16291	5360	10.4	3.0	71300	4460	16.0	15.3	124	30	5.818	95.36
H22A563DBL	200-220/3/50	47500	13917	4640	10.2	3.0	60900	3840	15.9	15.9	124	30	5.818	95.36
H22A583ABC	208-230/1/60	57100	16730	5780	9.9	2.9	72900	4810	15.2	26.6	178	45	6.032	98.86
H22A583DBE	460/3/60	58400	17111	5550	10.5	3.1	74500	4630	16.1	7.9	62	15	6.032	98.86
H22A583DBE	380-415/3/50	49200	14415	4650	10.6	3.1	62800	3740	16.8	7.7	62	15	6.032	98.86
H22A623ABC	208-230/1/60	60800	17840	6080	10.0	2.9	78200	5060	15.5	28.2	178	47	6.308	103.36
H22A623DBE	460/3/60	60800	17814	5980	10.2	3.0	78200	4960	15.8	8.5	62	16	6.308	103.36
H22A623DBE	380-415/3/50	51800	15177	5030	10.3	3.0	66600	4160	16.0	8.2	62	16	6.308	103.36
H22A623DBF	575/3/60	60800	17814	5980	10.2	3.0	78200	4960	15.8	7	50	13	6.308	103.36
H22A623DBL	200-230/3/60	60800	17814	5980	10.2	3.0	78200	4960	15.8	17	124	32	6.308	103.36
H22A623DBL	200-220/3/50	52300	15324	5130	10.2	3.0	67300	4250	15.8	18	124	32	6.308	103.36

Data Subject to Revision

Model	Oil Charge OZ	Oil Charge L	Weight Net Lbs	Weight Net Kg	Weight Ship Lbs	Weight Ship Kg	ELECTRICAL START COMPONENTS Run Capacitor MFD/VOLTS	ELECTRICAL START COMPONENTS Start Capacitor MFD/VOLTS	ELECTRICAL START COMPONENTS G.E. Relay	DIMENSIONS A IN	DIMENSIONS A MM	DIMENSIONS B IN	DIMENSIONS B MM	DIMENSIONS C IN	DIMENSIONS C MM
H22A503ABC	55	1.6	87.5	39.7	92.0	41.7	40/440	135-155/330	3ARR3*4A*	14.00	355.60	16.10	408.94	16.40	416.56
H22A503DBE	55	1.6	79.5	36.1	84.0	38.1	N/A	N/A	N/A	14.00	355.60	16.20	411.48	16.50	419.10
H22A503DBE	55	1.6	79.5	36.1	84.0	38.1	N/A	N/A	N/A	14.00	355.60	16.20	411.48	16.50	419.10
H22A503DBF	55	1.6	79.5	36.1	84.0	38.1	N/A	N/A	N/A	14.00	355.60	16.20	411.48	16.50	419.10
H22A503DBL	55	1.6	79.5	36.1	84.0	38.1	N/A	N/A	N/A	14.00	355.60	16.20	411.48	16.50	419.10
H22A503DBL	55	1.6	79.5	36.1	84.0	38.1	N/A	N/A	N/A	14.00	355.60	16.20	411.48	16.50	419.10
H22A543ABC	55	1.6	87.5	39.7	92.0	41.7	45/440	135-155/330	3ARR3*4A*	14.00	355.60	16.10	408.94	16.40	416.56
H22A543DBE	55	1.6	79.5	36.1	84.0	38.1	N/A	N/A	N/A	14.00	355.60	16.20	411.48	16.50	419.10
H22A543DBE	55	1.6	79.5	36.1	84.0	38.1	N/A	N/A	N/A	14.00	355.60	16.20	411.48	16.50	419.10
H22A543DBF	55	1.6	79.5	36.1	84.0	38.1	N/A	N/A	N/A	14.00	355.60	16.20	411.48	16.50	419.10
H22A543DBL	55	1.6	79.5	36.1	84.0	38.1	N/A	N/A	N/A	14.00	355.60	16.20	411.48	16.50	419.10
H22A543DBL	55	1.6	79.5	36.1	84.0	38.1	N/A	N/A	N/A	14.00	355.60	16.20	411.48	16.50	419.10
H22A563DBF	55	1.6	79.5	36.1	84.0	38.1	N/A	N/A	N/A	14.00	355.60	16.20	411.48	16.50	419.10
H22A563DBL	55	1.6	83.0	37.6	87.5	39.7	N/A	N/A	N/A	14.00	355.60	16.20	411.48	16.50	419.10
H22A563DBL	55	1.6	83.0	37.6	87.5	39.7	N/A	N/A	N/A	14.00	355.60	16.20	411.48	16.50	419.10
H22A583ABC	55	1.6	93.0	42.2	97.5	44.2	55/440	135-155/330	3ARR3*4A*	14.00	355.60	16.10	408.94	16.40	416.56
H22A583DBE	55	1.6	83.0	37.6	87.5	39.7	N/A	N/A	N/A	14.00	355.60	16.20	411.48	16.50	419.10
H22A583DBE	55	1.6	83.0	37.6	87.5	39.7	N/A	N/A	N/A	14.00	355.60	16.20	411.48	16.50	419.10
H22A623ABC	55	1.6	93.0	42.2	97.5	44.2	55/440	135-155/330	3ARR3*4A*	14.00	355.60	16.10	408.94	16.40	416.56
H22A623DBE	55	1.6	83.0	37.6	87.5	39.7	N/A	N/A	N/A	14.00	355.60	16.20	411.48	16.50	419.10
H22A623DBE	55	1.6	83.0	37.6	87.5	39.7	N/A	N/A	N/A	14.00	355.60	16.20	411.48	16.50	419.10
H22A623DBF	55	1.6	83.0	37.6	87.5	39.7	N/A	N/A	N/A	14.00	355.60	16.20	411.48	16.50	419.10
H22A623DBL	55	1.6	83.0	37.6	87.5	39.7	N/A	N/A	N/A	14.00	355.60	16.20	411.48	16.50	419.10
H22A623DBL	55	1.6	83.0	37.6	87.5	39.7	N/A	N/A	N/A	14.00	355.60	16.20	411.48	16.50	419.10

H22A

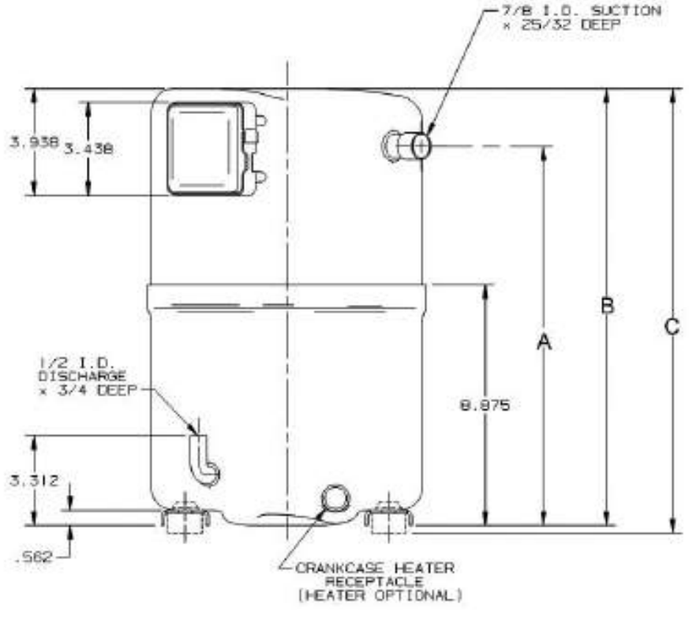

H23A

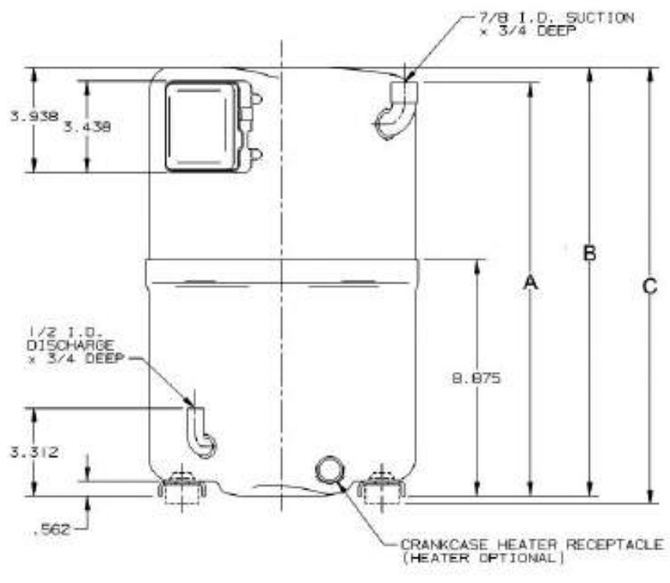

H23A *SERIES*

Model	Volts Phase Hz	@45/130 Capacity BTU/H	@45/130 Capacity WATTS	@45/130 Motor Input WATTS	@45/130 EER/COP BTU/WH	@45/130 EER/COP W/W	@45/100 Capacity BTU/H	@45/100 Motor Input WATTS	@45/100 EER BTU/WH	Electrical Data RLA	Electrical Data LRA	Electrical Data MCC	Displacement IN3/REV	Displacement CM3/REV
H23A *SERIES* (R22)														
H23A303ABC	208-230/1/60	29200	8556	2870	10.2	3.0	3900	2350	16.6	13	81	24	3.280	53.74
H23A303ABH	220-240/1/50	24000	7032	2430	11.4	3.3	32100	1990	16.1	11.4	62	20	3.280	53.74
H23A303ABH	265/1/60	29300	8585	2880	10.2	3.0	39100	2360	16.6	11.6	72	22	3.280	53.74
H23A303DBE	380-415/3/50	23900	7003	2340	10.2	3.0	32100	1910	16.8	4.1	30	8	3.280	53.74
H23A303DBE	460/3/60	29100	8526	2820	10.3	3.0	39100	2310	16.9	4.4	30	8	3.280	53.74
H23A303DBL	200-220/3/50	24200	7091	2400	10.1	3.0	32400	1960	16.5	9	76	16	3.280	53.74
H23A303DBL	200-230/3/60	29200	8556	2850	10.3	3.0	39000	2330	16.8	8.8	70	16	3.280	53.74
H23A353ABC	208-230/1/60	34900	10226	3440	10.1	3.0	45600	2830	16.1	15.9	87	27.5	3.757	61.56
H23A353ABH	220-240/1/50	28600	8380	2920	9.8	2.9	37400	2400	15.6	13.8	78	24.5	3.757	61.56
H23A353ABH	265/1/60	34600	10138	3490	9.9	2.9	45300	2880	15.7	14.3	78	24	3.757	3.757
H23A353ABJ	208-230/1/50	29400	8614	2830	10.4	3.0	38500	2330	16.5	14	84	24	3.757	3.757
H23A353DBE	380-415/3/50	28800	8438	2820	10.2	3.0	37700	2290	16.4	5	35	8.3	3.757	61.56
H23A353DBE	460/3/60	34900	10226	3390	10.3	3.0	45600	2760	16.6	4.8	35	8.3	3.757	61.56
H23A353DBL	200-220/3/50	28800	8438	2880	10.0	2.9	37700	2340	16.1	10	76	18	3.757	61.56
H23A353DBL	200-230/3/60	34900	10226	3390	10.3	3.0	45600	2760	16.6	9.6	70	18	3.757	61.56
H23A383ABC	208-230/1/60	37900	11121	3690	10.3	3.0	49100	3031	16.2	17	97	30	4.147	67.95
H23A383ABK	220-240/1/50	32400	9507	3220	10.1	3.0	41000	2640	15.9	15.5	82	28	4.147	67.95
H23A383DBE	460/3/60	37900	11121	3650	10.4	3.0	49100	2970	16.6	5.5	39	9.5	4.147	67.95
H23A383DBE	380-415/3/50	31400	9216	3050	10.3	3.0	40700	2470	16.5	5.2	39	9.5	4.147	67.95
H23A383DBF	500/3/50	31700	9288	3100	10.2	3.0	41000	2510	16.3	4.2	36	8	4.147	67.95
H23A383DBF	575/3/60	37900	11105	3650	10.4	3.0	49100	2970	16.6	4.2	36	8	4.147	67.95
H23A383DBL	200-230/3/60	37900	11121	3650	10.4	3.0	49100	2970	16.6	10.4	78	20	4.147	67.95
H23A383DBL	200-220/3/50	32000	9389	3140	10.2	3.0	41440	2540	16.3	10.7	76	20	4.147	67.95
H23A423ABC	208-230/1/60	42100	12353	4090	10.3	3.0	53900	3360	16	18.7	110	31.2	4.505	73.82
H23A423ABK	220-240/1/50	35000	10270	3420	10.2	3.0	44800	2810	15.9	16.7	90	28	4.505	73.82
H23A423DBE	406-3-60	42100	12353	4070	10.4	3.0	53900	3310	16.3	5.7	39	9.5	4.505	73.82
H23A423DBE	380-415/3/50	35200	10328	3430	10.3	3.0	45000	2790	16.2	5.8	39	9.5	4.505	73.82
H23A423DBF	575/3/60	42100	12353	4070	10.4	3.0	53900	3310	16.3	4.6	36	8	4.505	73.82
H23A423DBF	500/3/50	35200	10328	3450	10.2	3.0	45000	2800	16.1	4.6	36	8	4.505	73.82
H23A423DBL	200-230/3/60	42100	12353	4070	10.4	3.0	53900	3308	16.3	11.7	78	20	4.505	73.82
H23A423DBL	200-220/3/50	35500	10416	3390	10.5	3.1	45400	2750	16.5	11.2	78	20	4.505	73.82
H23A423DBW	380-460/3/60	42600	12481	4020	10.6	3.1	54600	3320	16.4	6.7	44	11	4.505	73.82
H23A463ABC	208-230/1/60	46300	13585	4550	10.2	3.0	58855	3745	15.7	21.6	118	36.4	4.926	80.72
H23A463ABK	220-240/1/50	39200	11485	3760	10.4	3.0	50100	2960	16.7	18.8	101	33	4.926	80.72
H23A463DBE	460/3/60	46300	13585	4430	10.4	3.0	58900	3670	16.0	6.3	45	13	4.926	80.72
H23A463DBE	380-415/3/50	38800	11368	3840	10.1	3.0	49300	3150	15.6	6.3	45	13	4.926	80.72
H23A463DBF	575/3/60	46300	13585	4460	10.4	3.0	58900	3670	16.0	5	36	10	4.926	80.72
H23A463DBF	500/3/50	38,800	11368	3840	10.1	3.0	49300	3150	15.6	4.9	36	10	4.926	80.71
H23A463DBL	200-230/3/60	46300	13585	4460	10.4	3.0	58900	3670	16.0	12.6	90	24	4.926	80.72
H23A463DBL	200-220/3/50	39500	11573	3870	10.2	3.0	50200	3170	15.8	12.7	90	24	4.926	80.71
H23A503ABC	208-230/1/60	49000	14378	4890	10.0	2.9	64000	3980	16.1	22.3	138	40	5.202	85.24
H23A503DBE	460/3/60	49000	14378	4890	10.0	2.9	64000	3980	16.1	6.8	53	12.5	5.202	85.24

Data Subject to Revision

Model	Oil Charge OZ	Oil Charge L	Weight Net Lbs	Weight Net Kg	Weight Ship Lbs	Weight Ship Kg	ELECTRICAL START COMPONENTS Run Capacitor MFD/VOLTS	ELECTRICAL START COMPONENTS Start Capacitor MFD/VOLTS	ELECTRICAL START COMPONENTS G.E. Relay	DIMENSIONS A IN	DIMENSIONS A MM	DIMENSIONS B IN	DIMENSIONS B MM	DIMENSIONS C IN	DIMENSIONS C MM
H23A303ABC	50	1.5	73.5	33.3	78.0	35.4	40/370	145-175/250	3ARR3*10S*	14.25	361.95	14.63	371.60	14.90	378.46
H23A303ABH	50	1.5	73.5	33.3	78.0	35.4	35/370	145-175/250	3ARR3*10AS*	14.25	361.95	14.63	371.60	14.90	378.46
H23A303ABH	50	1.5	73.5	33.3	78.0	35.4	25/440	145-175/330	3ARR3*25B*	14.25	361.95	14.63	371.60	14.90	378.46
H23A303DBE	50	1.5	72.0	32.7	76.5	34.7	N/A	N/A	N/A	14.25	361.95	14.63	371.60	14.90	378.46
H23A303DBE	50	1.5	72.0	32.7	76.5	34.7	N/A	N/A	N/A	14.25	361.95	14.63	371.60	14.90	378.46
H23A303DBL	50	1.5	72.0	32.7	76.5	34.7	N/A	N/A	N/A	14.25	361.95	14.63	371.60	14.90	378.46
H23A303DBL	50	1.5	72.0	32.7	76.5	34.7	N/A	N/A	N/A	14.25	361.95	14.63	371.60	14.90	378.46
H23A353ABC	50	1.5	74.0	33.6	78.5	35.6	35/440	145-175/250	3ARR3*4A*	14.25	361.95	14.63	371.60	14.90	378.46
H23A353ABH	50	1.5	74.0	33.6	78.5	35.6	35/370	145-175/250	3ARR3*25AV*	14.25	361.95	14.63	371.60	14.90	378.46
H23A353ABH	50	1.5	74.0	33.6	78.5	35.6	25/440	145-175/330	3ARR3*10D*	14.25	361.95	14.63	371.60	14.90	378.46
H23A353ABJ	50	1.5	81.0	36.7	85.5	38.8	35/440	145-175/330	3ARR3*4AA*	14.25	361.95	14.63	371.60	14.90	378.46
H23A353DBE	50	1.5	73.0	33.1	77.5	35.2	N/A	N/A	N/A	14.25	361.95	14.63	371.60	14.90	378.46
H23A353DBE	50	1.5	73.0	33.1	77.5	35.2	N/A	N/A	N/A	14.25	361.95	14.63	371.60	14.90	378.46
H23A353DBL	50	1.5	73.0	33.1	77.5	35.2	N/A	N/A	N/A	14.25	361.95	14.63	371.60	14.90	378.46
H23A353DBL	50	1.5	73.0	33.1	77.5	35.2	N/A	N/A	N/A	14.25	361.95	14.63	371.60	14.90	378.46
H23A383ABC	50	1.5	78.0	35.5	82.5	37.5	35/440	145-175/250	3ARR3*4A*	12.50	317.20	14.60	371.30	14.90	378.40
H23A383ABK	50	1.5	78.0	35.5	82.5	37.5	35/440	145-175/330	3ARR3*4AA*	12.50	317.20	14.60	371.30	14.90	378.40
H23A383DBE	50	1.5	74.0	33.6	78.5	35.7	N/A	N/A	N/A	12.50	317.20	14.60	371.30	14.90	378.40
H23A383DBE	50	1.5	74.0	33.6	78.5	35.7	N/A	N/A	N/A	12.50	317.20	14.60	371.30	14.90	378.40
H23A383DBF	50	1.5	74.0	33.6	78.5	35.6	N/A	N/A	N/A	14.06	357.12	14.63	371.60	14.90	378.46
H23A383DBF	50	1.5	74.0	33.6	78.5	35.6	N/A	N/A	N/A	14.06	357.12	14.63	371.60	14.90	378.46
H23A423DBL	50	1.5	74.0	33.6	78.5	35.7	N/A	N/A	N/A	12.50	317.20	14.60	371.30	14.90	378.40
H23A383DBL	50	1.5	74.0	33.6	78.5	35.7	N/A	N/A	N/A	12.50	317.20	14.60	371.30	14.90	378.40
H23A423ABC	50	1.5	78.0	35.5	82.5	37.5	40/440	145-175/250	3ARR3*4A*	12.50	317.20	14.60	371.30	14.90	378.40
H23A423ABK	50	1.5	78.0	35.5	82.5	37.5	40/440	145-175/330	3ARR3*27AA*	12.50	317.20	14.60	371.30	14.90	378.40
H23A423DBE	50	1.5	74.0	33.6	78.5	35.7	N/A	N/A	N/A	12.50	317.20	14.60	371.30	14.90	378.40
H23A423DBE	50	1.5	74.0	33.6	78.5	35.7	N/A	N/A	N/A	12.50	317.20	14.60	371.30	14.90	378.40
H23A423DBF	50	1.5	74.0	33.6	78.5	35.7	N/A	N/A	N/A	12.50	317.20	14.60	371.30	14.90	378.40
H23A423DBF	50	1.5	74.0	33.6	78.5	35.7	N/A	N/A	N/A	12.50	317.20	14.60	371.30	14.90	378.40
H23A463DBL	50	1.5	74.0	33.6	78.5	35.7	N/A	N/A	N/A	12.50	317.20	14.60	371.30	14.90	378.40
H23A463DBL	50	1.5	74.0	33.6	78.5	35.7	N/A	N/A	N/A	12.50	317.20	14.60	371.30	14.90	378.40
H23A423DBW	50	1.5	79.0	35.9	82.0	37.3	N/A	N/A	N/A	12.50	317.20	14.60	371.30	14.90	378.40
H23A463ABC	55	1.6	81.0	36.8	85.5	38.9	40/440	135-155/330	3ARR3*4A*	12.50	317.20	14.60	371.30	14.90	378.40
H23A463ABK	55	1.6	85.0	38.6	89.5	40.7	40/440	145-175/330	3ARR3*4AA*	12.50	317.20	14.60	371.30	14.90	378.40
H23A463DBE	55	1.6	74.0	33.6	78.5	35.7	N/A	N/A	N/A	12.50	317.20	14.60	371.30	14.90	378.40
H23A463DBE	55	1.6	74.0	33.6	78.5	35.7	N/A	N/A	N/A	12.50	317.20	14.60	371.30	14.90	378.40
H23A463DBF	55	1.6	74.0	33.6	78.5	35.7	N/A	N/A	N/A	12.50	317.20	14.60	371.30	14.90	378.40
H23A463DBF	55	1.6	74.0	33.6	78.5	35.6	N/A	N/A	N/A	14.06	357.12	14.63	371.60	14.90	378.46
H23A503DBL	55	1.6	74.0	33.6	78.5	35.7	N/A	N/A	N/A	12.50	317.20	14.60	371.30	14.90	378.40
H23A463DBL	55	1.6	74.0	33.6	78.5	35.7	N/A	N/A	N/A	12.50	317.20	14.60	371.30	14.90	378.40
H23A503ABC	55	1.6	87.5	39.8	92.0	41.8	40/440	135-155/330	3ARR3*4A*	14.00	355.30	16.10	409.40	16.40	416.50
H23A503DBE	55	1.6	79.5	36.1	84.0	38.2	N/A	N/A	N/A	14.00	355.30	16.10	409.40	16.40	416.50

H23A *SERIES*

Model	Volts Phase Hz	@45/130 Capacity BTU/H	@45/130 Capacity WATTS	@45/130 Motor Input WATTS	@45/130 EER/COP BTU/WH	@45/130 EER/COP W/W	@45/100 Capacity BTU/H	@45/100 Motor Input WATTS	@45/100 EER BTU/WH	Electrical Data RLA	Electrical Data LRA	Electrical Data MCC	Displacement IN3/REV	Displacement CM3/REV
H23A *SERIES* (R22)														
H23A503DBE	380-415/3/50	42200	12382	4210	10.0	2.9	55100	3420	16.1	6.7	53	12.5	5.202	85.24
H23A503DBF	500/3/50	42200	12365	4210	10.0	2.9	55100	3420	16.1	5.4	43	10	5.202	85.24
H23A503DBF	575/3/60	49000	14357	4890	10.0	2.9	64000	3980	16.1	5.5	43	9	5.202	85.24
H23A503DBL	200-230/3/60	49000	14378	4890	10.0	2.9	64000	3980	16.1	13.7	106	25	5.202	85.24
H23A503DBL	200-220/3/50	42400	12435	4310	9.8	2.9	55400	3510	15.8	14.7	106	25	5.202	85.24
H23A543ABC	208-230/1/60	53400	15669	5340	10.0	2.9	68400	4460	15.3	24.4	138	45	5.655	92.66
H23A543DBE	460/3/60	53400	15669	5250	10.2	3.0	68400	4350	15.7	7.3	53	14	5.655	92.66
H23A543DBE	380-415/3/50	46000	13478	4460	10.3	3.0	58900	3680	16.0	7.2	53	12.5	5.655	92.66
H23A543DBF	500/3/50	46000	13478	4460	10.3	3.0	58900	3680	16.0	5.7	43	10	5.546	90.88
H23A543DBF	575/3/60	53400	15646	5250	10.2	3.0	68400	4350	15.7	5.8	43	10	5.546	90.88
H23A543DBL	200-230/3/60	53400	15669	5250	10.1	3.0	68400	4350	15.7	14.5	106	27	5.655	92.66
H23A543DBL	200-220/3/50	46600	13653	4610	10.1	3.0	59700	3810	15.7	15.1	106	25	5.655	92.66
H23A563ABC	208-230/1/60	55600	16314	5450	10.2	3.0	71300	4570	15.6	24.7	142	45	5.818	95.33
H23A563DBE	460/3/60	55600	16314	5360	10.4	3.0	71300	4460	16.0	7.7	62	15	5.818	95.33
H23A563DBE	380-415/3/50	47500	13938	4560	10.4	3.0	60900	3770	16.2	7.5	62	14	5.818	95.33
H23A563DBF	575/3/60	55600	16314	5360	10.4	3.0	71300	4460	16.0	6.1	50	12	5.818	95.33
H23A563DBF	500/3/50	47500	13938	4560	10.4	3.0	60900	3770	16.2	6.1	50	12	5.818	95.33
H23A563DBL	200-230/3/60	55600	16314	5360	10.4	3.0	71300	4460	16.0	15.3	124	30	5.818	95.33
H23A563DBL	200-220/3/50	47500	13938	4640	10.2	3.0	60900	3840	15.9	16	124	30	5.818	95.33
H23A563DBX	380-3-60	55600	16291	5520	10.1	3.0	70900	4740	15.0	9.1	51	15	5.818	95.32
H23A583ABC	208-230/1/60	57100	16730	5780	9.9	2.9	72900	4810	15.2	26.6	178	45	6.032	98.84
H23A583DBE	460/3/60	58400	17111	5550	10.5	3.1	74500	4630	16.1	7.9	62	15	6.032	98.84
H23A583DBE	380-415/3/50	49200	14400	4650	10.6	3.1	62800	3740	16.8	7.7	62	15	6.032	98.84
H23A623ABC	208-230/1/60	60800	17840	6080	10.0	2.9	78200	5060	15.5	28.2	178	47	6.308	103.36
H23A623DBE	460/3/60	60800	17840	5980	10.2	3.0	78200	4960	15.8	8.8	62	16	6.308	103.36
H23A623DBE	380-415/3/50	51800	15199	5030	10.3	3.0	66600	4160	16.0	8.2	62	16	6.308	103.36
H23A623DBF	575/3/60	60800	17840	5980	10.2	3.0	78200	4960	15.8	6.8	50	13	6.308	103.36
H23A623DBF	500/3/50	51800	15199	5030	10.3	3.0	66600	4160	16.0	6.5	50	13	6.308	103.36
H23A623DBL	200-230/3/60	60800	17840	5980	10.2	3.0	78200	4960	15.8	17	124	32	6.308	103.36
H23A623DBL	200-220/3/50	52300	15346	5130	10.2	3.0	67300	4250	15.8	18	124	32	6.308	103.36
H29A *SERIES* (R22)														
H29A563DBV	380-415/3/50	46,000	13551	3974	11.6	3.4	58796	3079	19.1	6.8	66	15	5.70	93.40
H29A563DBV	380-460/3/60	56,600	16607	4850	11.7	3.4	72100	3850	18.7	7.0	75	15.5	5.70	93.40
H29A583DBV	380-415/3/50	47,700	13976	4090	11.7	3.4	60500	3250	18.7	7.0	75	15.5	5.818	95.33
H29A583DBV	380-460/3/60	58,100	17023	5010	11.6	3.4	73700	3970	18.6	7.2	75	14.5	5.818	95.33
H29A623DBV	380-415/3/50	49,200	14415	4290	11.5	3.4	64300	3360	19.1	7.3	75	18.5	6.183	101.32
H29A623DBV	380-460/3/60	60,700	17785	5280	11.5	3.4	77900	4170	18.7	7.5	75	18	6.183	101.32
H29A723DBE	380-415/3/50	61,700	18078	5580	11.1	3.3	77600	4430	17.5	9.6	82	14	7.150	117.16
H29A723DBE	460/3/60	71,900	21066	6560	11.0	3.2	90300	5280	17.1	9.5	84	16	7.150	117.16
H29A723DBV	380-415/3/50	61,700	18078	5580	11.1	3.2	77600	4430	17.5	9.6	82	14	7.150	117.16
H29A723DBV	380-460/3/60	71,900	21067	6560	11.0	3.2	90300	5280	17.1	9.5	84	16	7.150	117.16

Data Subject to Revision

Model	Oil Charge OZ	Oil Charge L	Weight Net Lbs	Weight Net Kg	Weight Ship Lbs	Weight Ship Kg	ELECTRICAL START COMPONENTS Run Capacitor MFD/VOLTS	ELECTRICAL START COMPONENTS Start Capacitor MFD/VOLTS	ELECTRICAL START COMPONENTS G.E. Relay	DIMENSIONS A IN	DIMENSIONS A MM	DIMENSIONS B IN	DIMENSIONS B MM	DIMENSIONS C IN	DIMENSIONS C MM
H23A503DBE	55	1.6	79.5	36.1	84.0	38.2	N/A	N/A	N/A	14.00	355.30	16.10	409.40	16.40	416.50
H23A503DBF	55	1.6	79.5	36.1	84.0	38.1	N/A	N/A	N/A	15.56	395.27	16.13	409.70	16.40	416.56
H23A503DBF	55	1.6	79.5	36.1	84.0	38.1	N/A	N/A	N/A	15.56	395.22	16.13	409.70	16.40	416.56
H23A543DBL	55	1.6	79.5	36.1	84.0	38.2	N/A	N/A	N/A	14.00	355.30	16.10	409.40	16.40	416.50
H23A503DBL	55	1.6	79.5	36.1	84.0	38.2	N/A	N/A	N/A	14.00	355.30	16.10	409.40	16.40	416.50
H23A543ABC	55	1.6	87.5	39.8	92.0	41.8	45/440	135-155/330	3ARR3*4A*	14.00	355.30	16.10	409.40	16.40	416.50
H23A543DBE	55	1.6	79.5	36.1	84.0	38.2	N/A	N/A	N/A	14.00	355.30	16.10	409.40	16.40	416.50
H23A543DBE	55	1.6	79.5	36.1	84.0	38.2	N/A	N/A	N/A	14.00	355.30	16.10	409.40	16.40	416.50
H23A543DBF	55	1.6	79.5	36.1	84.0	38.1	N/A	N/A	N/A	15.56	395.22	16.13	409.70	16.40	416.56
H23A543DBF	55	1.6	79.5	36.1	84.0	38.1	N/A	N/A	N/A	15.56	395.22	16.13	409.70	16.40	416.56
H23A543DBL	55	1.6	79.5	36.1	84.0	38.2	N/A	N/A	N/A	14.00	355.30	16.10	409.40	16.40	416.50
H23A543DBL	55	1.6	79.5	36.1	84.0	38.2	N/A	N/A	N/A	14.00	355.30	16.10	409.40	16.40	416.50
H23A563ABC	55	1.6	91.0	41.4	95.5	43.4	55/440	135-155/330	3ARR3*6U*	14.00	355.30	16.10	409.40	16.40	416.50
H23A563DBE	55	1.6	83.0	37.7	87.5	39.8	N/A	N/A	N/A	14.00	355.30	16.10	409.40	16.40	416.50
H23A563DBE	55	1.6	83.0	37.7	87.5	39.8	N/A	N/A	N/A	14.00	355.30	16.10	409.40	16.40	416.50
H23A563DBF	55	1.6	83.0	37.7	87.5	39.8	N/A	N/A	N/A	14.00	355.30	16.10	409.40	16.40	416.50
H23A563DBF	55	1.6	83.0	37.7	87.5	39.8	N/A	N/A	N/A	14.00	355.30	16.10	409.40	16.40	416.50
H23A563DBL	55	1.6	83.0	37.7	87.5	39.8	N/A	N/A	N/A	14.00	355.30	16.10	409.40	16.40	416.50
H23A563DBL	55	1.6	83.0	37.7	87.5	39.8	N/A	N/A	N/A	14.00	355.30	16.10	409.40	16.40	416.50
H23A563DBX	55	1.6	82.5	37.4	85.5	38.8	N/A	N/A	N/A	15.56	395.22	16.13	409.70	16.40	416.56
H23A583ABC	55	1.6	93.0	42.2	97.5	44.2	55/440	135-155/3	3ARR3*4A*	15.56	395.22	16.13	409.70	16.40	416.56
H23A583DBE	55	1.6	83.0	37.7	87.5	39.8	N/A	N/A	N/A	14.00	355.30	16.10	409.40	16.40	416.50
H23A583DBE	55	1.6	83.0	37.7	87.5	39.8	N/A	N/A	N/A	14.00	355.30	16.10	409.40	16.40	416.50
H23A623ABC	55	1.6	93.0	42.3	97.5	44.3	55/440	135-155/330	3ARR3*4A*	14.00	355.30	16.10	409.40	16.40	416.50
H23A623DBE	55	1.6	83.0	37.7	87.5	39.8	N/A	N/A	N/A	14.00	355.30	16.10	409.40	16.40	416.50
H23A623DBE	55	1.6	83.0	37.7	87.5	39.8	N/A	N/A	N/A	14.00	355.30	16.10	409.40	16.40	416.50
H23A623DBF	55	1.6	83.0	37.7	87.5	39.8	N/A	N/A	N/A	14.00	355.30	16.10	409.40	16.40	416.50
H23A623DBF	55	1.6	83.0	37.7	87.5	39.8	N/A	N/A	N/A	14.00	355.30	16.10	409.40	16.40	416.50
H23A623DBL	55	1.6	83.0	37.7	87.5	39.8	N/A	N/A	N/A	14.00	355.30	16.10	409.40	16.40	416.50
H23A623DBL	55	1.6	83.0	37.7	87.5	39.8	N/A	N/A	N/A	14.00	355.30	16.10	409.40	16.40	416.50
H29A563DBV	65	1.9	105.5	48.0	109.5	49.8	N/A	N/A	N/A	15.30	387.0	17.40	441.96	17.70	448.80
H29A563DBV	65	1.9	105.5	48.0	109.5	49.8	N/A	N/A	N/A	15.30	387.0	17.40	441.96	17.70	448.80
H29A583DBV	65	1.9	105.5	48.0	109.5	49.8	N/A	N/A	N/A	15.30	387.0	17.40	441.96	17.70	448.80
H29A583DBV	65	1.9	105.5	48.0	109.5	49.8	N/A	N/A	N/A	15.30	387.0	17.40	441.96	17.70	448.80
H29A623DBV	65	1.9	105.5	48.0	109.5	49.8	N/A	N/A	N/A	15.30	387.0	17.40	441.96	17.70	448.80
H29A623DBV	65	1.9	105.5	48.0	109.5	49.8	N/A	N/A	N/A	15.30	387.0	17.40	441.96	17.70	448.80
H29A723DBE	65	1.9	105.5	48.0	109.5	49.8	N/A	N/A	N/A	15.30	387.0	17.40	441.96	17.70	448.80
H29A723DBE	65	1.9	105.5	48.0	109.5	49.8	N/A	N/A	N/A	15.30	387.0	17.40	441.96	17.70	448.80
H29A723DBV	65	1.9	105.5	48.0	109.5	49.8	N/A	N/A	N/A	15.30	387.0	17.40	441.96	17.70	448.80
H29A723DBV	65	1.9	105.5	48.0	109.5	49.8	N/A	N/A	N/A	15.30	387.0	17.40	441.96	17.70	448.80

H73A *SERIES*

Model	Volts Phase Hz	@45/130 Capacity BTU/H	@45/130 Capacity WATTS	@45/130 Motor Input WATTS	@45/130 EER/COP BTU/WH	@45/130 EER/COP W/W	@45/100 Capacity BTU/H	@45/100 Motor Input WATTS	@45/100 EER BTU/WH	Electrical Data RLA	Electrical Data LRA	Electrical Data MCC	Displacement IN3/REV	Displacement CM3/REV
H73A *SERIES* (R407C)														
H73A353ABH	220-240/1/50	25500	7472	2640	9.7	2.8	35500	2270	15.7	13.8	78	24.5	3.757	61.56
H73A353DBE	380-415/3/50	25700	7530	2550	10.1	3.0	35700	2160	16.5	5	35	8.3	3.757	61.56
H73A353DBL	200-220/3/50	25700	7530	2600	9.9	2.9	35700	2210	16.2	10	76	18	3.757	61.56
H73A383ABK	220-240/1/50	28900	8468	2910	9.9	2.9	39800	2490	16.0	15.5	82	28	4.147	67.95
H73A383DBE	380-415/3/50	28000	8204	2750	10.2	3.0	38600	2330	16.5	5.2	39	9.5	4.147	67.95
H73A383DBE	460/3/60	35600	10431	3430	10.4	3.0	48900	2910	16.8	5.5	39	9.5	4.147	67.95
H73A383DBL	200-220/3/50	28600	8380	2830	10.1	3.0	39300	2400	16.4	10.7	82	20	4.147	67.95
H73A383DBL	200-230/3/60	35600	10431	3430	10.4	3.0	48900	2910	16.8	10.4	78	20	4.147	67.95
H73A423ABC	208-230/1/60	39100	11456	3920	10.0	2.9	53100	3360	15.8	18.7	110	31.2	4.511	73.91
H73A423ABK	220-240/1/50	31200	9142	3090	10.1	3.0	42400	2650	16.0	16.7	90	28	4.505	73.81
H73A423DBE	380-415/3/50	31400	9200	3100	10.1	3.0	42700	2630	16.2	5.8	39	9.5	4.505	73.81
H73A423DBL	200-220/3/50	31700	9288	3060	10.3	3.0	43100	2600	16.6	11.2	82	20	4.511	73.91
H73A423DBL	200-230/3/60	39100	11456	3900	10.0	2.9	53100	3310	16.1	11.7	78	20	4.511	73.91
H73A423DBW	380-460/3/60	38100	11163	3820	10.0	2.9	52400	3270	16.1	6.7	44	11	4.505	73.81
H73A463ABK	220-240/1/50	35000	10255	3400	10.3	3.0	47500	2820	16.8	18.8	101	33	4.926	80.71
H73A463DBE	380-415/3/50	34600	10138	3480	10.0	2.9	46700	2970	15.7	6.3	45	13	4.926	80.71
H73A463DBE	460/3/60	41100	12042	4030	10.2	3.0	55500	3440	16.1	6.3	45	13	4.926	80.71
H73A463DBL	200-220/3/50	35300	10343	3500	10.1	3.0	47600	2990	15.9	12.7	90	24	4.926	80.71
H73A503DBE	380-415/3/50	37700	11046	3810	9.9	2.9	52200	3230	16.2	6.7	53	12.5	5.140	84.21
H73A503DBL	200-220/3/50	37900	11105	3900	9.7	2.8	52500	3310	15.9	14.7	106	25	5.140	84.21
H73A543DBE	380-415/3/50	41100	12042	4040	10.2	3.0	55800	3470	16.1	7.2	53	12.5	5.655	92.65
H73A543DBE	460/3/60	50000	14650	5050	9.9	2.9	67900	4370	15.6	7.5	53	14	5.655	92.65
H73A543DBL	200-220/3/50	41600	12189	4170	10.0	2.9	56600	3590	15.8	15.1	106	25	5.655	92.65
H73A563ABC	208-230/1/60	52400	15353	5280	9.9	2.9	71300	4600	15.5	24.6	142	45	5.818	95.33
H73A563DBE	380-415/3/50	42400	12423	4120	10.3	3.0	57700	3550	16.2	7.5	62	14	5.818	95.33
H73A563DBE	460/3/60	52400	15353	5190	10.1	3.0	71300	4500	15.9	8	62	15	5.818	95.33
H73A563DBL	200-220/3/50	42400	12423	4200	10.1	3.0	57700	3620	16.0	15.9	124	30	5.818	95.33
H73A563DBL	200-230/3/60	52400	15353	5190	10.1	3.0	71300	4500	15.9	15.3	124	30	5.818	95.33
H73A623DBE	380-415/3/50	46200	13537	4550	10.2	3.0	63200	3920	16.1	8.2	62	16	6.308	103.35
H73A623DBE	460/3/60	54200	15881	5450	10.0	2.9	74200	4700	15.8	8.5	62	16	6.308	103.35
H73A623DBL	200-220/3/50	46700	13683	4640	10.0	2.9	63800	4000	15.9	18	124	32	6.308	103.35
H73A623DBL	200-230/3/60	54200	15881	5450	10.0	2.9	74200	4700	15.8	17	124	32	6.308	103.35

Data Subject to Revision

Model	Oil Charge OZ	Oil Charge L	Weight Net Lbs	Weight Net Kg	Weight Ship Lbs	Weight Ship Kg	ELECTRICAL START COMPONENTS Run Capacitor MFD/VOLTS	ELECTRICAL START COMPONENTS Start Capacitor MFD/VOLTS	ELECTRICAL START COMPONENTS G.E. Relay	DIMENSIONS A IN	DIMENSIONS A MM	DIMENSIONS B IN	DIMENSIONS B MM	DIMENSIONS C IN	DIMENSIONS C MM
H73A353ABH	50	1.5	74.0	33.6	78.5	35.6	35/370	145-175/250	3AAR3*25AV*	14.25	361.95	14.63	371.60	14.90	378.46
H73A353DBE	50	1.5	73.0	33.1	77.5	35.2	N/A	N/A	N/A	14.19	360.43	14.63	371.60	14.90	378.46
H73A353DBL	50	1.5	73.0	33.1	77.5	35.2	N/A	N/A	N/A	14.25	361.95	14.63	371.60	14.90	378.46
H73A383ABK	50	1.5	78.0	35.4	82.5	37.4	35/440	145-175/330	3ARR3*4AA*	14.25	361.95	14.63	371.60	14.90	378.46
H73A383DBE	50	1.5	74.0	33.6	78.5	35.6	N/A	N/A	N/A	14.19	360.43	14.63	371.60	14.90	378.46
H73A383DBE	50	1.5	74.0	33.6	78.5	35.6	N/A	N/A	N/A	14.19	360.43	14.63	371.60	14.90	378.46
H73A383DBL	50	1.5	74.0	33.6	78.5	35.6	N/A	N/A	N/A	14.25	361.95	14.63	371.60	14.90	378.46
H73A383DBL	50	1.5	74.0	33.6	78.5	35.6	N/A	N/A	N/A	14.25	361.95	14.63	371.60	14.90	378.46
H73A423ABC	50	1.5	78.0	35.4	82.5	37.4	40/440	145-175/250	3ARR3*4A*	14.25	361.95	14.63	371.60	14.90	378.46
H73A423ABK	50	1.5	78.0	35.4	82.5	37.4	40/440	145-175/330	3ARR*27AA*	14.25	361.95	14.63	371.60	14.90	378.46
H73A423DBE	50	1.5	74.0	33.6	78.5	35.6	N/A	N/A	N/A	14.19	360.43	14.63	371.60	14.90	378.46
H73A423DBL	50	1.5	74.0	33.6	78.5	35.6	N/A	N/A	N/A	14.25	361.95	14.63	371.60	14.90	378.46
H73A423DBL	50	1.5	74.0	33.6	78.5	35.6	N/A	N/A	N/A	14.25	361.95	14.63	371.60	14.90	378.46
H73A423DBW	50	1.5	74.0	33.6	78.5	35.6	N/A	N/A	N/A	12.50	317.50	14.63	371.60	14.90	378.46
H73A463ABK	50	1.5	85.0	38.6	89.5	40.6	40/440	145-175/330	3ARR3*4AA*	14.06	357.12	14.63	371.60	14.90	378.46
H73A463DBE	55	1.6	74.0	33.6	78.5	35.6	N/A	N/A	N/A	14.10	358.14	14.63	371.60	14.90	378.46
H73A463DBE	55	1.6	74.0	33.6	78.5	35.6	N/A	N/A	N/A	14.10	358.14	14.63	371.60	14.90	378.46
H73A463DBL	55	1.6	74.0	33.6	78.5	35.6	N/A	N/A	N/A	14.06	357.12	14.63	371.60	14.90	378.46
H73A503DBE	55	1.6	79.5	36.1	84.0	38.1	N/A	N/A	N/A	15.56	395.22	16.13	409.70	16.40	416.56
H73A503DBL	55	1.6	79.5	36.1	84.0	38.1	N/A	N/A	N/A	15.56	395.22	16.13	409.70	16.40	416.56
H73A543DBE	55	1.6	79.5	36.1	84.0	38.1	N/A	N/A	N/A	15.60	396.24	16.10	408.94	16.40	416.56
H73A543DBE	55	1.6	79.5	36.1	84.0	38.1	N/A	N/A	N/A	15.60	396.24	16.10	408.94	16.40	416.56
H73A543DBL	55	1.6	79.5	36.1	84.0	38.1	N/A	N/A	N/A	15.56	395.22	16.13	409.70	16.40	416.56
H73A563ABC	55	1.6	91.0	41.3	95.5	43.3	55/440	135-155/330	3ARR3*6U*	15.56	395.22	16.13	409.70	16.40	416.56
H73A563DBE	55	1.6	83.0	37.6	87.5	39.7	N/A	N/A	N/A	15.56	395.22	16.13	409.70	16.40	416.56
H73A563DBE	55	1.6	83.0	37.6	87.5	39.7	N/A	N/A	N/A	15.56	395.22	16.13	409.70	16.40	416.56
H73A563DBL	55	1.6	83.0	37.6	87.5	39.7	N/A	N/A	N/A	15.56	395.22	16.13	409.70	16.40	416.56
H73A563DBL	55	1.6	83.0	37.6	87.5	39.7	N/A	N/A	N/A	15.56	395.22	16.13	409.70	16.40	416.56
H73A623DBE	55	1.6	83.0	37.6	87.5	39.7	N/A	N/A	N/A	15.60	396.24	16.10	408.94	16.40	416.56
H73A623DBE	55	1.6	83.0	37.6	87.5	39.7	N/A	N/A	N/A	15.60	396.24	16.10	408.94	16.40	416.56
H73A623DBL	55	1.6	83.0	37.6	87.5	39.7	N/A	N/A	N/A	15.56	395.22	16.13	409.70	16.40	416.56
H73A623DBL	55	1.6	83.0	37.6	87.5	39.7	N/A	N/A	N/A	15.56	395.22	16.13	409.70	16.40	416.56

H73A

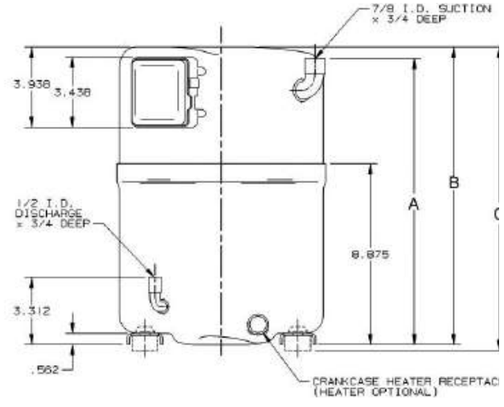

H79A *SERIES*

Model	Volts Phase Hz	@45/130 Capacity BTU/H	@45/130 Capacity WATTS	@45/130 Motor Input WATTS	@45/130 EER/COP BTU/WH	@45/130 EER/COP W/W	@45/100 Capacity BTU/H	@45/100 Motor Input WATTS	@45/100 EER BTU/WH	Electrical Data RLA	Electrical Data LRA	Electrical Data MCC	Displacement IN3/REV	Displacement CM3/REV
H79A *SERIES (R407C)*														
H79A383DBV	380-415/3/50	27500	8058	2600	10.6	3.1	38600	2140	18.1	4.8	54	11	4.147	67.95
H79A383DBV	380-460/3/60	33900	9933	3140	10.8	3.2	47300	2550	18.5	4.8	54	10.5	4.147	67.95
H79A423DBL	200-220/3/50	32000	9376	2880	11.1	3.3	45000	2370	18.9	10.7	138	20	4.505	73.81
H79A423DBL	200-230/3/60	38300	11222	3480	11.0	3.2	54000	2840	19.0	10.7	130	20	4.505	73.81
H79A423DBV	380-415/3/50	32000	9376	2880	11.1	3.3	45000	2370	18.9	5.9	67	12	4.486	73.50
H79A423DBV	380-460/3/60	38300	11222	3480	11.0	3.2	54000	2840	19.0	5.6	64	12	4.486	73.50
H79A473DBV	380-415/3/50	34600	10138	3070	11.2	3.3	47200	2530	18.6	5.5	64	11	4.939	80.92
H79A473DBV	380-460/3/60	42500	12453	3900	10.9	3.2	59900	3190	18.8	6.3	64	12	4.939	80.92
H79A503DBV	380-415/3/50	37800	11075	3340	11.3	3.3	50700	2680	19.0	6.6	71	12	5.202	85.23
H79A503DBV	380-460/3/60	45900	13449	4120	11.1	3.3	61600	3300	18.7	6.6	69	12	5.202	85.23
H79A563DBV	380-415/3/50	43300	12687	3780	11.5	3.4	55400	2960	18.7	7	79	15.5	5.699	93.37
H79A563DBV	380-460/3/60	52400	15353	4580	11.4	3.3	65900	3600	18.3	7	75	15.5	5.699	93.37
H79A623DBV	380-415/3/50	46400	13595	4120	11.3	3.3	61700	3290	18.8	7.9	76	18	6.183	101.30
H79A723DBE	380-415/3/50	55700	16320	5170	10.8	3.2	69400	4100	16.9	9.6	79	14	7.150	117.15
H79A723DBE	460/3/60	66900	19602	6270	10.7	3.1	83200	5040	16.5	9.4	84	16	7.150	117.15
H79A723DBV	380-415/3/50	55700	16320	5170	10.8	3.2	69400	4100	16.9	9.6	79	14	7.150	117.15
H79A723DBV	380-460/3/60	66900	19602	6270	10.7	3.1	83200	5040	16.5	9.4	84	16	7.150	117.15

Data Subject to Revision

Model	Oil Charge OZ	Oil Charge L	Weight Net Lbs	Weight Net Kg	Weight Ship Lbs	Weight Ship Kg	ELECTRICAL START COMPONENTS Run Capacitor MFD/VOLTS	ELECTRICAL START COMPONENTS Start Capacitor MFD/VOLTS	ELECTRICAL START COMPONENTS G.E. Relay	DIMENSIONS A IN	DIMENSIONS A MM	DIMENSIONS B IN	DIMENSIONS B MM	DIMENSIONS C IN	DIMENSIONS C MM
H79A383DBV	65	1.9	94.0	42.6	98.5	44.7	N/A	N/A	N/A	15.56	395.22	16.13	409.70	16.44	417.58
H79A383DBV	65	1.9	94.0	42.6	98.5	44.7	N/A	N/A	N/A	15.56	395.22	16.13	409.70	16.44	417.58
H79A423DBL	65	1.9	94.5	42.9	98.5	44.7	N/A	N/A	N/A	16.81	426.97	17.37	441.20	17.69	449.33
H79A423DBL	65	1.9	94.5	42.9	98.5	44.7	N/A	N/A	N/A	16.81	426.97	17.37	441.20	17.69	449.33
H79A423DBV	65	1.9	94.0	42.6	98.5	44.7	N/A	N/A	N/A	16.82	427.23	17.37	441.20	17.69	449.33
H79A423DBV	65	1.9	94.0	42.6	98.5	44.7	N/A	N/A	N/A	16.81	426.97	17.37	441.20	17.69	449.33
H79A473DBV	65	1.9	94.5	42.9	98.5	44.7	N/A	N/A	N/A	16.81	426.97	17.37	441.20	17.69	449.33
H79A473DBV	65	1.9	94.5	42.9	98.5	44.7	N/A	N/A	N/A	16.81	426.97	17.37	441.20	17.69	449.33
H79A503DBV	65	1.9	100.5	45.6	104.5	47.4	N/A	N/A	N/A	15.25	387.35	17.37	441.20	17.69	449.33
H79A503DBV	65	1.9	100.5	45.6	104.5	47.4	N/A	N/A	N/A	15.25	387.35	17.37	441.20	17.69	449.33
H79A563DBV	65	1.9	105.5	47.9	109.5	49.7	N/A	N/A	N/A	16.81	426.97	17.37	441.20	17.69	449.33
H79A563DBV	65	1.9	105.5	47.9	109.5	49.7	N/A	N/A	N/A	16.81	426.97	17.37	441.20	17.69	449.33
H79A623DBV	65	1.9	105.0	47.6	109.5	49.7	N/A	N/A	N/A	16.81	426.97	17.37	441.20	17.69	449.33
H79A723DBE	65	1.9	105.5	47.9	109.5	49.7	N/A	N/A	N/A	16.81	426.97	17.37	441.20	17.69	449.33
H79A723DBE	65	1.9	105.5	47.9	109.5	49.7	N/A	N/A	N/A	16.81	426.97	17.37	441.20	17.69	449.33
H79A723DBV	65	1.9	105.5	47.9	109.5	49.7	N/A	N/A	N/A	15.25	387.35	17.37	441.20	17.69	449.33
H79A723DBV	65	1.9	105.0	47.6	109.5	49.7	N/A	N/A	N/A	15.25	387.35	17.37	441.20	17.69	449.33

H79A

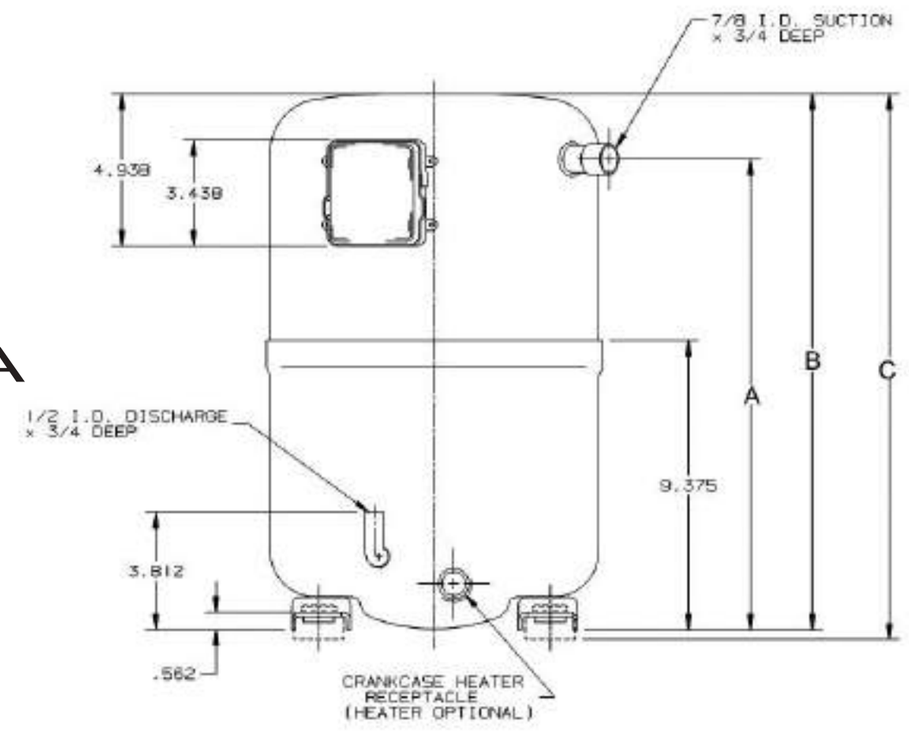

H2EB *SERIES*

Model	Volts Phase Hz	@45/130 Capacity BTU/H	@45/130 Capacity WATTS	@45/130 Motor Input WATTS	@45/130 EER/COP BTU/WH	@45/130 EER/COP W/W	@45/100 Capacity BTU/H	@45/100 Motor Input WATTS	@45/100 EER BTU/WH	Electrical Data RLA	Electrical Data LRA	Electrical Data MCC	Displacement IN3/REV	Displacement CM3/REV
H2EB *SERIES* (R22)														
H2EB153ABC	208-230/1/60	15200	4454	1680	9.0	2.6	20600	1440	14.3	9	45	13.5	1.946	32.94
H2EB153ABK	220-240/1/50	12500	3662	1430	8.7	2.5	16700	1220	13.7	7.2	43	9.6	1.946	31.89
H2EB173ABK	220-240/1/50	14200	4161	1590	8.9	2.6	19300	1340	14.4	7.9	43	12.5	2.139	35.06
H2EB18SABC	208-230/1/60	17600	5157	1930	9.1	2.7	22900	1630	14.1	10.2	60	15	2.144	36.3
H2EB193ABC	208-230/1/60	19000	5567	2100	9.1	2.7	24600	1760	14.0	11.2	61	15	2.341	39.63
H2EB193ABK	220-240/1/50	15400	4512	1740	8.8	2.6	20200	1490	13.5	8.5	42	14	2.341	38.37
H2EB203ABC	208-230/1/60	20000	5868	2200	9.0	2.6	26400	1810	14.6	11	61	17	2.463	40.36
H2EB20SABC	208-230/1/60	19800	5801	2170	9.1	2.7	26200	1770	14.8	11.2	55	16.5	2.463	40.36
H2EB223ABC	208-230/1/60	21800	6387	2421	9.0	2.6	28200	2130	13.2	12.1	61	18.2	2.699	44.22
H2EB223ABK	220-240/1/50	18200	5333	1940	9.4	2.8	23800	1660	14.4	9.7	63	15	2.586	42.38
H2EB22SABK	220-240/1/50	18600	5450	1960	9.5	2.8	24400	1680	14.5	9.8	58	16	2.586	42.38
H2EB243ABC	208-230/1/60	23800	6973	2460	9.7	2.8	312000	2160	14.5	10.6	66	18.4	2.844	46.60
H2EB243ABK	220-240/1/50	20600	6035	2200	9.3	2.7	26600	1850	14.4	10.4	63	16.6	2.844	46.60
H2EB243ABP	220-240/1/50	20600	6035	2090	9.8	2.9	26500	1720	15.4	11.3	78	20	2.844	46.60
H2EB24SABC	208-230/1/60	23600	6915	2510	9.4	2.8	30900	2270	13.6	13	73	20.5	2.849	48.23
H2EB24SABK	220-240/1/50	20200	5919	2130	9.5	2.8	26100	1780	14.7	10.6	58	17	2.844	46.61
H2EB263ABC	208-230/1/60	26300	7705	2900	9.3	2.7	33800	2360	14.3	12.8	83	21	3.131	51.30
H2EB263ABK	220-240/1/50	22600	6631	2450	9.2	2.7	28900	2080	13.9	11.6	63	17.2	3.079	50.45
H2EB26SABC	208-230/1/60	25700	7530	2820	9.1	2.7	33000	2360	14.0	13.4	73	20	3.131	51.30
H2EB283ABC	208-230/1/60	28100	8233	3100	9.1	2.7	35700	2780	12.8	13.5	83	22.5	3.361	55.07
H2EB283ABK	220-240/1/50	23500	6885	2560	9.2	2.7	30100	2190	13.8	12.6	76	22	3.281	53.76
H2EB28SABC	208-230/1/60	28300	8292	3110	9.1	2.7	35900	2790	12.9	14.9	81	21	3.361	55.07
H2EB293ABK	220-240/1/50	24300	7130	2700	9.0	2.6	31000	2350	13.2	13.5	76	22	3.413	55.92
H2EB29SABK	220-240/1/50	24500	7178	2660	9.2	2.7	31300	2310	13.5	13.5	72	20.5	3.413	55.94
H2EB323ABC	208-230/1/60	30800	9024	3500	8.8	2.6	38300	3100	12.3	16.5	93	24	3.695	62.56
H2EB323ABK	220-240/1/50	26600	7793	2910	9.2	2.7	33600	2430	13.8	13.3	73	21.5	3.643	59.69
H2EB323ABP	220-240/1/50	26600	7775	2800	9.5	2.8	33400	2360	14.2	15.1	95	23	3.643	59.69
H2EB32SABC	208-230/1/60	31500	9229	3430	9.2	2.7	38900	2930	13.2	15.7	93	25	3.695	62.56
H2EB32SABK	220-240/1/50	26000	7618	2890	9.0	2.6	32800	2410	13.6	14.3	72	20	3.643	59.69
H22B *SERIES* (R22)														
H22B243ABK	220-240/1/50	19800	5801	1870	10.5	3.1	26400	1460	18.1	9.5	53	13.5	2.539	41.6

Data Subject to Revision

Model	Oil Charge OZ	Oil Charge L	Weight Net Lbs	Weight Net Kg	Weight Ship Lbs	Weight Ship Kg	ELECTRICAL START COMPONENTS Run Capacitor MFD/VOLTS	ELECTRICAL START COMPONENTS Start Capacitor MFD/VOLTS	ELECTRICAL START COMPONENTS G.E. Relay	DIMENSIONS A IN	DIMENSIONS A MM	DIMENSIONS B IN	DIMENSIONS B MM	DIMENSIONS C IN	DIMENSIONS C MM
H2EB153ABC	40	1.1	52.0	23.6	55.0	24.9	20/370	88-108/250	3ARR3*3U*	11.90	302.26	12.60	320.04	12.90	327.66
H2EB153ABK	40	1.1	54.0	24.5	57.0	25.9	25/370	88-108/250	3ARR3*10AU	12.00	304.80	12.60	320.04	12.90	327.70
H2EB173ABK	40	1.1	54.0	24.5	57.0	25.9	25/370	88-108/250	3ARR3*25AS*	12.00	304.80	12.60	320.04	12.90	327.70
H2EB18SABC	30	.9	50.0	22.7	53.0	24.0	25/370	145-175/250	3ARR3*3V*	11.90	302.26	12.60	320.04	12.90	327.66
H2EB193ABC	40	1.1	54.0	24.5	57.0	25.9	25/370	88-108/250	3ARR3*10S*	11.90	302.26	12.60	320.04	12.90	327.66
H2EB193ABK	40	1.1	54.0	24.5	57.0	25.9	25/370	88-108/250	3ARR3*25AS*	12.00	304.80	12.60	320.04	12.90	327.70
H2EB203ABC	40	1.1	54.0	24.6	57.0	25.9	25/370	88-108/250	3ARR3*10S*	12.00	303.70	12.60	320.30	12.90	327.40
H2EB20SABC	30	.9	49.5	22.5	53.0	24.0	25/370	145-175/250	3ARR3*3A*	12.10	307.34	12.50	317.50	12.80	325.12
H2EB223ABC	40	1.1	54.0	24.6	57.0	25.9	25/370	88-108/250	3ARR3*10S*	12.00	303.70	12.60	320.30	12.90	327.40
H2EB223ABK	40	1.1	54.5	24.7	58.0	26.3	35/370	145-175/250	3ARR3*10AT	12.60	320.04	13.30	337.82	13.50	342.90
H2EB22SABK	30	.9	54.0	24.5	57.5	26.1	30/370	145-175/250	3ARR3*10AU	12.70	322.58	13.10	332.74	13.40	340.40
H2EB243ABC	40	1.1	60.5	27.5	64.0	29.1	35/370	88-108/250	3ARR3*24AP*	12.90	326.10	13.30	336.20	13.50	343.30
H2EB243ABK	40	1.1	54.5	24.8	58.0	26.4	35/370	145-175/250	3ARR3*10AT*	12.60	319.70	13.30	336.20	13.50	343.30
H2EB243ABP	40	1.1	60.5	27.5	64.0	29.1	35/440	88-108/250	3ARR3*24AP*	12.60	319.70	13.30	336.20	13.50	343.30
H2EB24SABC	30	.9	53.5	24.3	57.0	25.9	30/370	145-175/250	3ARR3*10W*	11.10	281.94	13.10	332.74	13.40	340.36
H2EB24SABK	30	.9	54.0	24.5	57.5	26.1	35/370	145-175/250	3ARR3*10AU	12.70	322.58	13.10	332.74	13.40	340.70
H2EB263ABC	40	1.1	61.0	27.8	64.5	29.3	35/370	145-175/250	3ARR3*24P*	12.60	319.70	13.30	336.20	13.50	343.30
H2EB263ABK	40	1.1	54.5	24.8	58.0	26.4	35/370	145-175/250	3ARR3*10AT*	12.60	319.70	13.30	336.20	13.50	343.30
H2EB26SABC	30	.9	53.5	24.3	57.0	25.9	35/370	145-175/250	3ARR3*3U*	12.70	322.58	13.10	332.74	13.40	340.36
H2EB283ABC	40	1.1	59.5	27.1	63.0	28.7	45/370	145-175/250	3ARR3*3R*	12.90	326.10	13.30	336.20	13.50	343.30
H2EB283ABK	40	1.1	61.0	27.8	64.5	29.3	40/370	88-108/250	3ARR3*24AP*	12.90	326.10	13.30	336.20	13.50	343.30
H2EB28SABC	30	.9	55.5	25.2	59.0	26.8	45/370	145-175/250	3ARR3*10S*	12.70	322.58	13.30	337.82	13.60	345.44
H2EB293ABK	40	1.1	61.0	27.8	64.5	29.3	40/370	88-108/250	3ARR3*24AP*	12.90	326.10	13.30	336.20	13.50	343.30
H2EB29SABK	30	.9	56.0	25.4	59.5	27.0	40/370	145-175/250	3ARR3*24AP*	12.70	322.58	13.40	340.36	13.70	348.00
H2EB323ABC	40	1.1	61.0	27.7	64.5	29.3	45/440	145-175/250	3ARR3*10S*	12.60	320.04	13.20	335.28	13.50	342.90
H2EB323ABK	40	1.1	61.0	27.8	64.5	29.3	45/370	145-175/250	3ARR3*10AT	12.90	326.10	13.30	336.20	13.50	343.30
H2EB323ABP	40	1.1	63.5	28.9	67.0	30.5	45/440	88-108/250	3ARR3*24AP*	13.40	338.80	13.80	348.80	14.00	356.00
H2EB32SABC	30	.9	58.5	26.5	62.0	28.1	45/440	189-227/250	3ARR3*10V*()	11.60	294.64	13.50	342.90	13.80	350.52
H2EB32SABK	30	.9	56.0	25.4	59.5	27.0	45/370	145-175/250	3ARR3*6AS*()	12.70	322.58	13.40	340.36	13.70	348.00
H22B243ABK	35	1.0	58.0	26.3	61.5	27.9	35/370	145-175/250	10AU()	12.90	328.00	13.50	343.00	13.80	351.00

H2EB

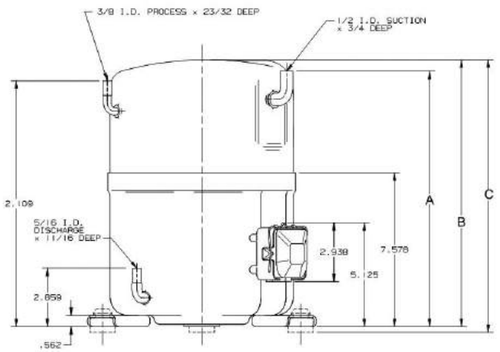

H22B

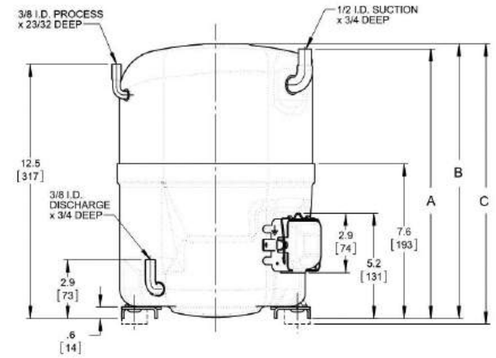

H29B *SERIES*

Model	Volts Phase Hz	@45/130 Capacity BTU/H	@45/130 Capacity WATTS	@45/130 Motor Input WATTS	@45/130 EER/COP BTU/WH	@45/130 EER/COP W/W	@45/100 Capacity BTU/H	@45/100 Motor Input WATTS	@45/100 EER BTU/WH	Electrical Data RLA	Electrical Data LRA	Electrical Data MCC	Displacement IN3/REV	Displacement CM3/REV
H29B *SERIES* (R22)														
H29B13UABC	208-230/1/60	13300	3897	1260	10.5	3.1	19000	1080	17.6	6	48	10	1.664	27.26
H29B14UABC	208-230/1/60	14100	4131	1350	10.4	3.0	19800	1150	17.3	6.1	48	12	1.786	29.26
H29B15UABC	208-230/1/60	15500	4541	1470	10.5	3.1	21300	1210	17.6	6.7	48	12	1.946	31.88
H29B16UABC	208-230/1/60	16600	4841	1550	10.7	3.1	22700	1270	17.8	6.8	48	14	1.993	32.65
H29B17UABC	208-230/1/60	17200	5047	1610	10.7	3.1	23600	1330	17.8	7.2	48	14	2.040	33.42
H29B17UABH	265/1/60	17400	5106	1630	10.7	3.1	23400	1370	17.1	6.2	44	12	2.040	33.42
H29B17UABH	220-240/1/50	14800	4343	1410	10.5	3.1	19900	1120	17.9	6.4	42	11	2.040	33.42
H29B18UABC	208-230/1/60	18300	5311	1700	10.7	3.1	24900	1410	17.7	7.4	48	14	2.139	35.05
H29B18UABH	265/1/60	18100	5282	1680	10.8	3.2	24300	1390	17.5	6.5	44	11.5	2.139	35.05
H29B18UABH	220-240/1/50	15300	4489	1440	10.6	3.1	20500	1160	17.7	6.7	42	12	2.139	35.05
H29B20UABC	208-230/1/60	20500	6006	1910	10.7	3.1	26900	1580	17.1	8.6	60	17	2.416	39.59
H29B20UABH	265/1/60	20800	6103	1950	10.6	3.1	28800	1680	17.2	7.2	58	15	2.416	39.59
H29B20UABH	220-240/1/50	17900	5244	1680	10.7	3.1	23800	1350	17.7	7.6	55	14.5	2.416	39.59
H29B22UABC	208-230/1/60	22600	6621	2120	10.7	3.1	30700	1740	17.6	9.6	60	18	2.586	42.37
H29B22UABH	265/1/60	22700	6651	2090	10.8	3.2	31100	1750	17.8	8.0	58	15	2.586	42.37
H29B22UABH	220-240/1/50	19600	5742	1820	10.8	3.2	26000	1460	17.8	8.4	55	15	2.586	42.37
H29B22UDBL	200-230/3/60	22000	6690	2050	10.8	3.2	30900	1750	17.7	6.5	58	12	2.586	42.37
H29B22UDBL	200-220/3/50	19500	5721	1870	10.5	3.1	26000	1490	17.4	6.9	60	12	2.586	42.37
H29B22UDBV	380-460/3/60	22000	6446	2050	10.8	3.2	30900	1750	17.7	3.2	30	5.7	2.586	42.37
H29B22UDBV	380-415/3/50	19500	5713	1870	10.5	3.1	26000	1490	17.4	3.3	30	6.3	2.586	42.37
H29B24UABC	208-230/1/60	24200	7115	2210	10.9	3.2	31300	1790	18.0	9.6	61	19	2.699	44.22
H29B24UABH	220-240/1/50	20200	5919	1860	10.8	3.2	26900	1450	18.5	9.4	56	13.6	2.699	44.22
H29B24UABH	265/1/60	23600	6915	2130	11.1	3.3	32000	1790	17.9	8.3	58	14.1	2.699	44.22
H29B24UDBL	200-230/3/60	23500	6885	2180	10.8	3.2	31800	1780	17.9	6.5	58	13	2.699	44.22
H29B24UDBL	200-220/3/50	20400	5977	1960	10.4	3.0	27200	1580	17.3	7.1	60	13.1	2.699	44.22
H29B24UDBV	380-460/3/60	23600	6914	2190	10.8	3.2	31400	1760	17.8	3.4	30	6.7	2.699	44.22
H29B24UDBV	380-415/3/50	20300	5947	1940	10.5	3.1	27100	1550	17.5	3.4	30	6.7	2.699	44.22
H29B26UABC	208-230/1/60	26700	7823	2450	10.9	3.2	34500	1940	17.8	10.9	68	20	2.905	47.60
H29B26UABH	220-240/1/50	21900	6417	2020	10.8	3.2	28900	1600	18.1	9.6	58	18	2.905	47.60
H29B26UABH	265/1/60	26200	7677	2340	11.2	3.3	35000	1930	18.1	9.4	58	15	2.905	47.60
H29B26UDBL	200-230/3/60	26100	7688	2410	10.8	3.2	35300	2000	17.6	7.8	68	13.5	2.905	47.60
H29B26UDBL	200-220/3/50	22300	6533	2150	10.4	3.0	29500	1700	17.3	8.5	72	13.5	2.905	47.60
H29B26UDBV	380-460/3/60	26100	7647	2410	10.8	3.2	35300	2000	17.6	3.9	36	7.4	2.905	47.60
H29B26UDBV	380-415/3/50	22300	6533	2150	10.4	3.0	29400	1700	17.3	4.1	38	7.4	2.905	47.60
H29B28UABC	208-230/1/60	28800	8438	2640	10.9	3.2	36600	2070	17.7	11.8	73	22	3.056	50.07
H29B28UABH	265/1/60	28500	8350	2590	11.0	3.2	37300	2120	17.6	10.4	72	18.5	3.056	50.07
H29B28UABH	220-240/1/50	23500	6895	2180	10.8	3.2	31700	1780	17.8	10.5	69	17.2	3.056	50.07
H29B28UDBL	200-230/3/60	28000	8216	2580	10.9	3.2	35800	1860	19.2	7.8	68	13	3.056	50.07
H29B28UDBL	200-220/3/50	24400	7159	2310	10.5	3.1	31600	1820	17.4	8.7	72	13.7	3.056	50.07
H29B28UDBV	380-460/3/60	27800	8157	2610	10.6	3.1	36100	2080	17.4	4.1	36	7.4	3.056	50.07
H29B28UDBV	380-415/3/50	23900	7002	2310	10.3	3.0	31600	1760	17.9	4.2	38	7.4	3.056	50.07
H29B30UABC	208-230/1/60	29900	8760	2720	11.0	3.2	38300	2160	17.7	12.4	82	23	3.197	52.38
H29B30UABH	265/1/60	30200	8803	2780	10.9	3.2	39000	2240	17.4	11.5	80	21.5	3.197	52.38
H29B30UABH	220-240/1/50	25000	7365	2330	10.7	3.1	32600	1880	17.4	11.3	76	19.7	3.197	52.38

Data Subject to Revision

Model	Oil Charge OZ	Oil Charge L	Weight Net Lbs	Weight Net Kg	Weight Ship Lbs	Weight Ship Kg	ELECTRICAL START COMPONENTS Run Capacitor MFD/VOLTS	ELECTRICAL START COMPONENTS Start Capacitor MFD/VOLTS	ELECTRICAL START COMPONENTS G.E. Relay	DIMENSIONS A IN	DIMENSIONS A MM	DIMENSIONS B IN	DIMENSIONS B MM	DIMENSIONS C IN	DIMENSIONS C MM
H29B13UABC	35	1.0	59.0	26.8	63.0	28.6	30/370	161-193/250	3ARR3*3V*	11.24	285.50	13.25	336.55	13.53	343.66
H29B14UABC	35	1.0	59.0	26.8	63.0	28.6	30/370	161-193/25	3ARR3*3V	11.24	285.50	13.25	336.55	13.53	343.66
H29B15UABC	35	1.0	59.5	27.1	63.0	28.7	30/370	161-193/250	3ARR3*3V*	11.20	285.00	13.20	336.30	13.50	343.40
H29B16UABC	35	1.0	59.5	27.1	63.0	28.7	30/370	161-193/250	3ARR3*3V*	11.20	285.00	13.20	336.30	13.50	343.40
H29B17UABC	35	1.0	59.5	27.1	63.0	28.7	30/370	161-193/250	3ARR3*3V*	11.20	285.00	13.20	336.30	13.50	343.40
H29B17UABH	35	1.0	61.5	28.0	64.0	29.1	25/440	88-108/330	3ARR3*10U*	11.20	285.00	13.20	336.30	13.50	343.40
H29B17UABH	35	1.0	61.5	28.0	64.0	29.1	30/370	88-108/330	3ARR3*10S*	11.20	285.00	13.20	336.30	13.50	343.40
H29B18UABC	35	1.0	59.5	27.1	63.0	28.7	30/370	161-193/250	3ARR3*3V*	11.20	285.00	13.20	336.30	13.50	343.40
H29B18UABH	35	1.0	61.5	28.0	64.0	29.1	25/440	88-108/330	3ARR3*10U	11.20	285.00	13.20	336.30	13.50	343.40
H29B18UABH	35	1.0	61.5	28.0	64.0	29.1	30/370	88-108/330	3ARR3*10S*	11.20	285.00	13.20	336.30	13.50	343.40
H29B20UABC	35	1.0	61.0	27.8	64.5	29.3	30/370	145-175/250	3ARR3*3U*	11.20	285.00	13.20	336.30	13.50	343.40
H29B20UABH	35	1.0	65.0	29.5	68.5	31.1	30/440	88-108/330	3ARR3*10S*	11.70	297.70	13.80	349.00	14.00	356.10
H29B20UABH	35	1.0	65.0	29.5	68.5	31.1	30/370	88-108/330	3ARR3*10U*	11.70	297.70	13.80	349.00	14.00	356.10
H29B22UABC	35	1.0	61.0	27.8	64.5	29.3	30/370	145-175/250	3ARR3*3U*	11.20	285.00	13.20	336.30	13.50	343.40
H29B22UABH	35	1.0	65.0	29.5	68.5	31.1	30/440	88-108/330	3ARR3*10S*	11.70	297.70	13.80	349.00	14.00	356.10
H29B22UABH	35	1.0	65.0	29.5	68.5	31.1	35/370	88-108/330	3ARR3*10U*	11.70	297.70	13.80	349.00	14.00	356.10
H29B22UDBL	35	1.0	59.5	27.1	63.0	28.7	N/A	N/A	N/A	11.20	285.00	13.20	336.30	13.50	343.40
H29B22UDBL	35	1.0	59.5	27.1	63.0	28.7	N/A	N/A	N/A	11.20	285.00	13.20	336.30	13.50	343.40
H29B22UDBV	35	1.0	60.5	27.5	64.0	29.1	N/A	N/A	N/A	11.20	285.00	13.20	336.30	13.50	343.40
H29B22UDBV	35	1.0	59.5	27.1	63.0	28.7	N/A	N/A	N/A	11.20	285.00	13.20	336.30	13.50	343.40
H29B24UABC	35	1.0	63.5	28.9	67.0	30.5	35/370	145-175/250	3ARR3*3T*	11.70	297.70	13.80	349.00	14.00	356.10
H29B24UABH	35	1.0	66.0	29.9	69.5	31.5	40/370	145-175/250	3ARR3 *10S*	11.73	297.94	13.75	349.25	14.03	356.36
H29B24UABH	35	1.0	66.0	29.9	69.5	31.5	30/440	88-108/330	3ARR3 *10S*	11.73	297.94	13.75	349.25	14.03	356.36
H29B24UDBL	35	1.0	61.0	27.7	64.5	29.3	N/A	N/A	N/A	11.70	297.70	13.80	349.00	14.00	356.10
H29B24UDBL	35	1.0	61.0	27.7	64.5	29.3	N/A	N/A	N/A	11.70	297.70	13.80	349.00	14.00	356.10
H29B24UDBV	35	1.0	61.0	27.7	64.5	29.3	N/A	N/A	N/A	11.70	297.70	13.80	349.00	14.00	356.10
H29B24UDBV	35	1.0	61.0	27.7	64.5	29.3	N/A	N/A	N/A	11.70	297.70	13.80	349.00	14.00	356.10
H29B26UABC	35	1.0	63.5	28.9	67.0	30.5	35/370	145-175/250	3ARR3*3T*	11.70	297.70	13.80	349.00	14.00	356.10
H29B26UABH	35	1.0	66.0	29.9	69.5	31.5	40/370	145-175/250	3ARR3 *10S*	11.73	297.94	13.75	349.25	14.03	356.36
H29B26UABH	35	1.0	66.0	29.9	69.5	31.5	30/440	88-108/330	3ARR3 *10S*	11.73	297.94	13.75	349.25	14.03	356.36
H29B26UDBL	35	1.0	63.0	28.6	66.5	30.2	N/A	N/A	N/A	11.70	297.70	13.80	349.00	14.00	356.10
H29B26UDBL	35	1.0	63.0	28.6	66.5	30.2	N/A	N/A	N/A	11.70	297.70	13.80	349.00	14.00	356.10
H29B26UDBV	35	1.0	63.0	28.6	66.5	30.2	N/A	N/A	N/A	11.70	297.70	13.80	349.00	14.00	356.10
H29B26UDBV	35	1.0	63.0	28.6	66.5	30.2	N/A	N/A	N/A	11.70	297.70	13.80	349.00	14.00	356.10
H29B28UABC	35	1.0	63.5	28.9	67.0	30.5	35/370	161-193/250	3ARR3*3T*	11.70	297.70	13.80	349.00	14.00	356.10
H29B28UABH	35	1.0	65.5	29.8	69.0	31.4	30/440	88/108/330	3ARR3*3L*	11.70	297.60	13.80	348.80	14.00	355.90
H29B28UABH	35	1.0	65.5	29.8	69.0	31.4	40/370	145-175/250	3ARR3*3L*	11.70	297.60	13.80	348.80	14.00	355.90
H29B28UDBL	35	1.0	63.0	28.6	66.5	30.2	N/A	N/A	N/A	11.70	297.70	13.80	349.00	14.00	356.10
H29B28UDBL	35	1.0	63.0	28.6	66.5	30.2	N/A	N/A	N/A	11.70	297.70	13.80	349.00	14.00	356.10
H29B28UDBV	35	1.0	63.0	28.6	66.5	30.2	N/A	N/A	N/A	11.70	297.70	13.80	349.00	14.00	356.10
H29B28UDBV	35	1.0	63.0	28.6	66.5	30.2	N/A	N/A	N/A	11.70	297.70	13.80	349.00	14.00	356.10
H29B30UABC	35	1.0	68.5	31.2	72.0	32.8	40/370	145-175/250	3ARR3*3P*	12.20	310.40	14.20	361.70	14.50	368.80
H29B30UABH	35	1.0	66.0	30.0	69.5	31.6	30/440	145-175/250	3ARR3*10S*	12.20	310.30	14.30	361.50	14.50	368.60
H29B30UABH	35	1.0	66.0	30.0	69.5	31.6	40/370	88-108/250	3ARR3*10S*	12.20	310.30	14.30	361.50	14.50	368.60

H29B *SERIES*

Model	Volts Phase Hz	@45/130 Capacity BTU/H	@45/130 Capacity WATTS	@45/130 Motor Input WATTS	@45/130 EER/COP BTU/WH	@45/130 EER/COP W/W	@45/100 Capacity BTU/H	@45/100 Motor Input WATTS	@45/100 EER BTU/WH	Electrical Data RLA	Electrical Data LRA	Electrical Data MCC	Displacement IN3/REV	Displacement CM3/REV
H29B *SERIES* (R22)														
H29B30UDBL	200-230/3/60	30000	8790	2750	10.9	3.2	38900	2190	17.8	8.5	78	15.5	3.197	52.38
H29B30UDBL	200-220/3/50	26200	7676	2460	10.7	3.1	33200	1930	17.2	9.5	82	14.3	3.197	52.38
H29B30UDBV	380-460/3/60	29800	8731	2770	10.8	3.2	38600	2200	17.6	4.1	40	8	3.197	52.38
H29B30UDBV	380-415/3/50	25600	7512	2370	10.8	3.2	33400	1870	17.9	4.4	42	8	3.197	52.38
H29B32UABC	208-230/1/60	31900	9346	2930	10.9	3.2	41200	2320	17.8	13	82	23.5	3.361	55.07
H29B32UABH	220-240/1/50	26400	7735	2460	10.7	3.1	35000	1990	17.6	11.9	76	19.2	3.361	55.07
H29B32UABH	265/1/60	32000	9376	2990	10.7	3.1	40800	2380	17.2	11.8	80	20.5	3.361	55.07
H29B32UDBL	200-230/3/60	32400	9493	2940	11.0	3.2	41300	2350	17.6	9	78	16	3.361	55.07
H29B32UDBL	200-220/3/50	27800	8157	2620	10.6	3.1	35900	2050	17.5	9.5	82	16	3.361	55.07
H29B32UDBV	380-460/3/60	31600	9258	2930	10.8	3.2	40700	2360	17.2	4.5	40	8.1	3.361	55.07
H29B32UDBV	380-415/3/50	26100	7647	2460	10.6	3.1	34900	2000	17.4	4.7	42	8	3.361	55.07
H29B33UABC	208-230/1/60	33600	9844	3080	10.9	3.2	43200	2440	17.7	13.5	82	25	3.498	57.32
H29B33UABH	220-240/1/50	28000	8204	2620	10.7	3.1	36700	2070	17.7	12.6	76	20.4	3.498	57.32
H29B33UABH	265/1/60	34100	9991	3150	10.8	3.2	43100	2520	17.1	12.5	80	20.5	3.498	57.32
H29B33UDBF	500/3/50	27800	8145	2630	10.6	3.1	36100	2070	17.4	3.7	30	6	3.498	57.32
H29B33UDBF	575/3/60	33000	9669	3090	10.7	3.1	43000	2490	17.3	3.7	32	6.4	3.498	57.32
H29B33UDBL	200-230/3/60	33100	9698	3040	10.9	3.2	42800	2420	17.7	9.5	78	16.5	3.498	57.32
H29B33UDBL	200-220/3/50	27800	8145	2710	10.6	3.1	36900	2130	17.3	9.8	82	16.8	3.498	57.32
H29B33UDBV	380-460/3/60	33000	9669	3090	10.7	3.1	43000	2490	17.3	4.6	40	8.1	3.498	57.32
H29B33UDBV	380-415/3/50	27800	8145	2640	10.6	3.1	36100	2070	17.4	4.8	42	8.1	3.498	57.32
H29B35UABC	208-230/1/60	35700	10460	3270	10.9	3.2	45300	2580	17.5	14.4	86	26	3.695	60.55
H29B35UABH	265/1/60	35500	10417	3340	10.6	3.1	44900	2760	16.3	13	90	24	3.695	60.55
H29B35UABH	220-240/1/50	30000	8802	2820	10.6	3.1	38900	2300	16.9	13.4	85	23	3.695	60.55
H29B35UDBF	575/3/60	34100	9991	3230	10.5	3.1	42800	2570	16.7	3.9	32	6.3	3.695	60.55
H29B35UDBF	500/3/50	29900	8773	2900	10.3	3.0	37200	2250	16.6	3.9	30	6.3	3.695	60.55
H29B35UDBL	200-230/3/60	35000	10255	3290	10.7	3.1	42700	2580	16.5	9.6	78	16	3.695	60.55
H29B35UDBL	200-220/3/50	30400	8907	2900	10.5	3.1	37500	2260	16.6	10.3	82	16.8	3.695	60.55
H29B35UDBV	380-460/3/60	34400	10079	3270	10.5	3.1	44300	2610	16.9	4.9	40	8.6	3.695	60.55
H29B35UDBV	380-415/3/50	29600	8672	2840	10.4	3.0	38100	2170	17.5	5	42	8.6	3.695	60.55

Data Subject to Revision

Model	Oil Charge OZ	Oil Charge L	Weight Net Lbs	Weight Net Kg	Weight Ship Lbs	Weight Ship Kg	ELECTRICAL START COMPONENTS Run Capacitor MFD/VOLTS	ELECTRICAL START COMPONENTS Start Capacitor MFD/VOLTS	ELECTRICAL START COMPONENTS G.E. Relay	DIMENSIONS A IN	DIMENSIONS A MM	DIMENSIONS B IN	DIMENSIONS B MM	DIMENSIONS C IN	DIMENSIONS C MM
H29B30UDBL	35	1.0	67.5	30.7	71.0	32.3	N/A	N/A	N/A	12.20	310.40	14.20	361.70	14.50	368.80
H29B30UDBL	35	1.0	67.5	30.7	71.0	32.3	N/A	N/A	N/A	12.20	310.40	14.20	361.70	14.50	368.80
H29B30UDBV	35	1.0	67.5	30.7	71.0	32.3	N/A	N/A	N/A	12.20	310.40	14.20	361.70	14.50	368.80
H29B30UDBV	35	1.0	67.5	30.7	71.0	32.3	N/A	N/A	N/A	12.20	310.40	14.20	361.70	14.50	368.80
H29B32UABC	35	1.0	68.5	31.2	72.0	32.8	40/370	145-175/250	3ARR3*3P*	12.20	310.40	14.20	361.70	14.50	368.80
H29B32UABH	35	1.0	66.0	29.9	69.5	31.5	40/370	145-175/250	3ARR3 *10S*	12.23	310.64	14.25	361.95	14.53	369.06
H29B32UABH	35	1.0	66.0	29.9	69.5	31.5	30/440	88-108/330	3ARR3 *10S*	12.23	310.64	14.25	361.95	14.53	369.06
H29B32UDBL	35	1.0	67.5	30.7	71.0	32.3	N/A	N/A	N/A	12.20	310.40	14.20	361.70	14.50	368.80
H29B32UDBL	35	1.0	67.5	30.7	71.0	32.3	N/A	N/A	N/A	12.20	310.40	14.20	361.70	14.50	368.80
H29B32UDBV	35	1.0	67.5	30.7	71.0	32.3	N/A	N/A	N/A	12.20	310.40	14.20	361.70	14.50	368.80
H29B32UDBV	35	1.0	67.5	30.7	71.0	32.3	N/A	N/A	N/A	12.20	310.40	14.20	361.70	14.50	368.80
H29B33UABC	35	1.0	68.5	31.2	72.0	32.8	45/370	243-292/250	3ARR3*3V*	12.20	310.40	14.20	361.70	14.50	368.80
H29B33UABH	35	1.0	66.0	29.9	69.5	31.5	40/370	88-108/250	3ARR3*10S*	12.23	310.64	14.25	361.95	14.53	369.06
H29B33UABH	35	1.0	66.0	29.9	69.5	31.5	30/440	145-175/250	3ARR3*10S*	12.23	310.64	14.25	361.95	14.53	369.06
H29B33UDBF	35	1.0	66.0	29.9	69.5	31.5	N/A	N/A	N/A	12.23	310.64	14.25	361.95	14.53	369.06
H29B33UDBF	35	1.0	67.0	30.5	70.5	32.1	N/A	N/A	N/A	12.20	310.30	14.30	361.50	14.50	368.60
H29B33UDBL	35	1.0	67.0	30.5	70.5	32.1	N/A	N/A	N/A	12.20	310.40	14.20	361.70	14.50	368.80
H29B33UDBL	35	1.0	67.0	30.5	70.5	32.1	N/A	N/A	N/A	12.20	310.40	14.20	361.70	14.50	368.80
H29B33UDBV	35	1.0	67.5	30.7	71.0	32.3	N/A	N/A	N/A	12.20	310.40	14.20	361.70	14.50	368.80
H29B33UDBV	35	1.0	67.5	30.7	71.0	32.3	N/A	N/A	N/A	12.20	310.40	14.20	361.70	14.50	368.80
H29B35UABC	40	1.1	70.0	31.8	73.5	33.4	45/370	145-175/250	3ARR3*3N*	12.20	310.40	14.20	361.70	14.50	368.80
H29B35UABH	35	1.0	70.0	31.8	73.5	33.4	35/440	88-108/330	3ARR3*10S*	12.20	310.30	14.30	361.50	14.50	368.60
H29B35UABH	35	1.0	70.0	31.8	73.5	33.4	45/370	88-108/250	3ARR3*10S*	12.20	310.30	14.30	361.50	14.50	368.60
H29B35UDBF	40	1.1	71.6	32.5	71.0	32.3	N/A	N/A	N/A	12.20	310.40	14.20	361.70	14.50	368.80
H29B35UDBF	40	1.1	71.6	32.5	71.0	32.3	N/A	N/A	N/A	12.20	310.40	14.20	361.70	14.50	368.80
H29B35UDBL	40	1.1	71.6	32.5	71.0	32.3	N/A	N/A	N/A	12.20	310.40	14.20	361.70	14.50	368.80
H29B35UDBL	40	1.1	71.6	32.5	71.0	32.3	N/A	N/A	N/A	12.20	310.40	14.20	361.70	14.50	368.80
H29B35UDBV	40	1.1	71.6	32.5	71.0	32.3	N/A	N/A	N/A	12.20	310.40	14.20	361.70	14.50	368.80
H29B35UDBV	40	1.1	71.6	32.5	71.0	32.3	N/A	N/A	N/A	12.20	310.40	14.20	361.70	14.50	368.80

H29B

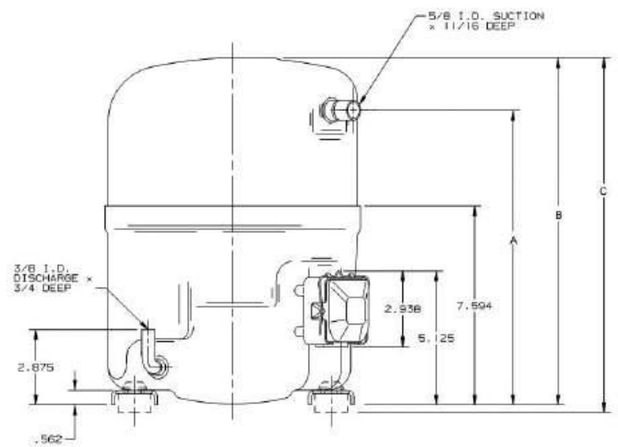

H79B *SERIES*

Model	Volts Phase Hz	@45/130 Capacity BTU/H	@45/130 Capacity WATTS	@45/130 Motor Input WATTS	@45/130 EER/COP BTU/WH	@45/130 EER/COP W/W	@45/100 Capacity BTU/H	@45/100 Motor Input WATTS	@45/100 EER BTU/WH	Electrical Data RLA	Electrical Data LRA	Electrical Data MCC	Displacement IN3/REV	Displacement CM3/REV
H79B *SERIES (R407C)*														
H79B15UABC	208-230/1/60	13800	4043	1390	10.0	2.9	20200	1190	16.9	6.7	48	12	1.880	30.80
H79B17UABC	208-230/1/60	15400	4512	1460	10.6	3.1	23600	1340	17.7	7.2	48	13.2	2.040	33.42
H79B17UABH	220-240/1/50	13100	3838	1280	10.2	3.0	19000	1100	17.3	6.4	42	11	2.040	33.42
H79B18UABC	208-230/1/60	16500	4835	1620	10.2	3.0	23700	1340	17.6	7.3	48	14	2.139	35.05
H79B18UABH	220-240/1/50	14100	4131	1360	10.4	3.0	20200	1120	18.1	6.7	42	12	2.139	35.05
H79B20UABH	220-240/1/50	16300	4776	1570	10.4	3.0	23200	1300	17.8	7.6	55	14.5	2.416	39.58
H79B22UABC	208-230/1/60	20400	5977	1990	10.2	3.0	29600	1730	17.1	9.6	60	18	2.586	42.37
H79B22UABH	220-240/1/50	17900	5245	1700	10.5	3.1	24700	1380	17.9	8.4	55	15	2.586	42.37
H79B22UDBL	200-220/3/50	17800	5215	1740	10.2	3.0	25300	1440	17.7	6.5	60	11	2.586	42.37
H79B22UDBL	200-230/3/60	19800	5801	1950	10.2	3.0	27700	1610	17.2	6.5	58	12	2.586	42.37
H79B22UDBV	380-415/3/50	17800	5215	1760	10.1	3.0	25100	1440	17.4	3.3	30	6.3	2.586	42.37
H79B24UABH	220-240/1/50	18500	5421	1760	10.5	3.1	26300	1450	18.2	9.4	56	13.6	2.699	44.22
H79B24UDBL	200-220/3/50	18200	5333	1770	10.3	3.0	26200	1480	17.7	7.1	60	13.1	2.699	44.22
H79B24UDBV	380-415/3/50	18200	5333	1770	10.3	3.0	26200	1480	17.7	3.4	30	6.7	2.699	44.22
H79B26UABC	208-230/1/60	23800	6973	2250	10.6	3.1	34600	1960	17.7	11.4	68	21.2	2.905	47.60
H79B26UABH	220-240/1/50	20500	6007	1930	10.6	3.1	28900	1580	18.3	9.6	58	18	2.905	47.60
H79B26UDBV	380-415/3/50	20300	5948	2010	10.1	3.0	28700	1640	17.4	4.1	38	7.4	2.905	47.60
H79B28UABC	208-230/1/60	25200	7384	2450	10.3	3.0	35800	2020	17.7	11.8	73	22	3.056	50.07
H79B28UABH	220-240/1/50	21700	6358	2100	10.4	3.0	29200	1710	17.1	10.5	69	17.2	3.056	50.07
H79B28UABH	265/1/60	25400	7442	2400	10.5	3.1	34900	2040	17.1	10.3	72	18.5	3.056	50.07
H79B28UDBL	200-220/3/50	21400	6270	2090	10.2	3.0	30200	1710	17.6	7.8	72	13	3.056	50.07
H79B28UDBL	200-230/3/60	24400	7149	2380	10.2	3.0	34400	1950	17.6	7.8	68	13.5	3.056	50.07
H79B28UDBV	380-415/3/50	21400	6270	2090	10.2	3.0	30200	1710	17.6	4.2	38	7.4	3.056	50.07
H79B30UABH	220-240/1/50	22900	6710	2170	10.5	3.1	32400	1860	17.4	11.3	76	19.7	3.197	52.38
H79B30UDBV	380/415-3-50	23300	6827	23300	10.5	3.1	32500	1800	18.1	4.4	42	8	3.197	52.38
H79B30UDBV	380-460/3/60	27100	7940	2580	10.5	3.1	38700	2160	18.0	4.1	40	8	3.197	52.38
H79B32UABC	208-230/1/60	29800	8731	2750	10.9	3.2	40200	2260	17.8	13	82	23.5	3.361	55.07
H79B32UABH	220-240/1/50	24000	7032	2290	10.5	3.1	34100	1910	17.9	11.9	76	19.2	3.361	55.07
H79B32UDBL	200-220/3/50	23800	6973	2300	10.3	3.0	34000	1930	17.6	9.5	82	16	3.361	55.07
H79B32UDBV	380-415/3/50	23800	6973	2300	10.3	3.0	34000	1930	17.6	4.7	42	8	3.361	55.07
H79B32UDBV	380-460/3/60	28800	8438	2740	10.5	3.1	41100	2290	18.0	4.5	40	8.1	3.361	55.07
H79B35UABC	208-230/1/60	33000	9669	3160	10.4	3.0	44500	2600	17.1	14.4	86	26	3.695	60.54
H79B35UABH	220-240/1/50	27500	8058	2680	10.3	3.0	37100	2080	16.8	13.4	85	23	3.695	60.54
H79B35UDBL	200-220/3/50	26900	7882	2660	10.1	3.0	37000	2080	17.6	10.3	82	16	3.695	60.54
H79B35UDBL	200-230/3/60	30700	8995	3030	10.1	3.0	42200	2390	17.6	9.6	78	16	3.695	60.54
H79B35UDBV	380-415/3/50	26900	7882	2660	10.1	3.0	37000	2100	17.6	5	42	8.6	3.695	60.54

Data Subject to Revision

Model	Oil Charge OZ	Oil Charge L	Weight Net Lbs	Weight Net Kg	Weight Ship Lbs	Weight Ship Kg	ELECTRICAL START COMPONENTS Run Capacitor MFD/VOLTS	ELECTRICAL START COMPONENTS Start Capacitor MFD/VOLTS	ELECTRICAL START COMPONENTS G.E. Relay	DIMENSIONS A IN	DIMENSIONS A MM	DIMENSIONS B IN	DIMENSIONS B MM	DIMENSIONS C IN	DIMENSIONS C MM
H79B15UABC	35	1.0	59.5	27.0	63.0	28.6	30/370	161-193/250	3ARR3*3V*	12.76	324.10	13.25	336.55	13.53	343.66
H79B17UABC	35	1.0	59.5	27.0	63.0	28.6	30/370	161-193/250	3ARR3*3V*	12.76	324.10	13.25	336.55	13.53	343.66
H79B17UABH	35	1.0	61.0	27.7	64.5	29.3	30/370	145-175/250	3ARR3 *10S*	12.76	324.10	13.25	336.55	13.53	343.66
H79B18UABC	35	1.0	59.5	27.0	63.0	28.6	30/370	161-193/250	3ARR3*3V*	11.23	285.24	13.25	336.55	13.53	343.66
H79B18UABH	35	1.0	61.0	27.7	64.5	29.3	30/370	145-175/250	3ARR3 *10S*	12.76	324.10	13.25	336.55	13.53	343.66
H79B20UABH	35	1.0	63.5	28.8	67.0	30.4	35/370	145-175/250	3ARR3 *10S*	13.26	336.80	13.75	349.25	14.03	356.36
H79B22UABC	35	1.0	61.0	27.7	64.5	29.3	30/370	145-175/250	3ARR3*3U*	12.76	324.10	13.25	336.55	13.53	343.66
H79B22UABH	35	1.0	63.5	28.8	67.0	30.4	35/370	145-175/250	145-175/250	13.26	336.80	13.75	349.25	14.03	356.36
H79B22UDBL	35	1.0	59.5	27.0	63.0	28.6	N/A	N/A	N/A	12.76	324.10	13.25	336.55	13.53	343.66
H79B22UDBL	35	1.0	59.5	27.0	63.0	28.6	N/A	N/A	N/A	12.76	324.10	13.25	336.55	13.53	343.66
H79B22UDBV	35	1.0	59.5	27.0	63.0	28.6	N/A	N/A	N/A	12.76	324.10	13.25	336.55	13.53	343.66
H79B24UABH	35	1.0	66.0	29.9	69.5	31.5	40/370	145-175/250	3ARR3*10S*	13.26	336.80	13.75	349.25	14.03	356.36
H79B24UDBL	35	1.0	59.5	27.0	63.0	28.6	N/A	N/A	N/A	13.48	342.39	13.75	349.25	14.03	356.36
H79B24UDBV	35	1.0	59.5	27.0	63.0	28.6	N/A	N/A	N/A	13.26	336.80	13.75	349.25	14.03	356.36
H79B26UABC	35	1.0	64.0	29.0	67.5	30.6	35/370	145-175/250	3ARR3*3T*	11.70	297.18	13.70	347.98	14.00	355.60
H79B26UABH	35	1.0	66.0	29.9	69.5	31.5	40/370	145-175/250	3ARR3*10S*	13.26	336.80	13.75	349.25	14.03	356.36
H79B26UDBV	35	1.0	62.0	28.1	65.5	29.7	N/A	N/A	N/A	13.26	336.80	13.75	349.25	14.03	356.36
H79B28UABC	35	1.0	64.0	29.0	67.5	30.6	35/370	145-175/250	3ARR3*3T*	13.48	342.39	13.75	349.25	14.03	356.36
H79B28UABH	35	1.0	65.5	29.7	69.0	31.3	40/370	145-175/250	3ARR3*3L*	13.26	336.80	13.75	349.25	14.03	356.36
H79B28UABH	35	1.0	65.5	29.7	69.0	31.3	30/440	88-108/330	3ARR3*3L*	13.26	336.80	13.75	349.25	14.03	356.36
H79B28UDBL	35	1.0	62.5	28.3	66.0	29.9	N/A	N/A	N/A	13.48	342.39	13.75	349.25	14.03	356.36
H79B28UDBL	35	1.0	62.5	28.3	66.0	29.9	N/A	N/A	N/A	13.48	342.39	13.75	349.25	14.03	356.36
H79B28UDBV	35	1.0	62.5	28.3	66.0	29.9	N/A	N/A	N/A	13.26	336.80	13.75	349.25	14.03	356.36
H79B30UABH	35	1.0	66.0	29.9	69.5	31.5	40/370	145-175/250	3ARR3*10S	13.76	349.50	14.25	361.95	14.53	369.06
H79B30UDBV	35	1.0	66.0	29.9	69.5	31.5	N/A	N/A	N/A	13.98	355.09	14.25	361.95	14.53	369.06
H79B30UDBV	35	1.0	66.0	29.9	69.5	31.5	N/A	N/A	N/A	13.98	355.09	14.25	361.95	14.53	369.06
H79B32UABC	35	1.0	68.5	31.1	72.0	32.7	40/370	145-175/250	3ARR3*3P*	13.98	355.09	14.25	361.95	14.53	369.06
H79B32UABH	35	1.0	66.0	29.9	69.5	31.5	40/370	145-175/250	3ARR3*10S*	13.76	349.50	14.25	361.95	14.53	369.06
H79B32UDBL	35	1.0	67.0	30.4	70.5	32.0	N/A	N/A	N/A	13.98	355.09	14.25	361.95	14.53	369.06
H79B32UDBV	35	1.0	67.0	30.4	70.5	32.0	N/A	N/A	N/A	13.98	355.09	14.25	361.95	14.53	369.06
H79B32UDBV	35	1.0	67.0	30.4	70.5	32.0	N/A	N/A	N/A	13.98	355.09	14.25	361.95	14.53	369.06
H79B35UABC	35	1.0	70.0	31.8	73.5	33.3	45/370	145-175/250	3ARR3*3N*	13.98	355.09	14.25	361.95	14.53	369.06
H79B35UABH	35	1.0	70.0	31.8	73.5	33.3	45/370	145-175/250	3ARR3*10S*	13.76	349.50	14.25	361.95	14.53	369.06
H79B35UDBL	35	1.0	66.0	29.9	69.5	31.5	N/A	N/A	N/A	13.98	355.09	14.25	361.95	14.53	369.06
H79B35UDBL	35	1.0	66.0	29.9	69.5	31.5	N/A	N/A	N/A	13.98	355.09	14.25	361.95	14.53	369.06
H79B35UDBV	35	1.0	66.0	29.9	69.5	31.5	N/A	N/A	N/A	13.98	355.09	14.25	361.95	14.53	369.06

H82B *SERIES*

Model	Volts Phase Hz	@45/130 Capacity BTU/H	@45/130 Capacity WATTS	@45/130 Motor Input WATTS	@45/130 EER/COP BTU/WH	@45/130 EER/COP W/W	@45/100 Capacity BTU/H	@45/100 Motor Input WATTS	@45/100 EER BTU/WH	Electrical Data RLA	Electrical Data LRA	Electrical Data MCC	Displacement IN3/REV	Displacement CM3/REV
H82B *SERIES* (R410A)														
H82B343ABC	208-230/1/60	34600	10138	3220	10.7	3.1	47300	2500	18.9	14.8	88	25.0	2.586	42.4
H82B343DBE	460/3/60	34200	10021	3190	10.7	3.1	46900	2480	18.9	4.7	34	8.1	2.586	42.4
H82B343DBE	380-415/3/50	28500	8351	2720	10.5	3.1	39900	2110	18.9	4.8	35	7.7	2.586	42.4
H82B343DBL	200-230/3/60	34200	10021	3190	10.7	3.1	46900	2480	18.9	9.5	68	17.3	2.586	42.4
H82B343DBL	200-220/3/50	28500	8351	2720	10.5	3.1	39900	2110	18.9	8.7	70	16.0	2.586	42.4
H82B363ABC	208-230/1/60	35700	10460	3320	10.7	3.1	48800	2580	18.9	15.1	88	25.4	2.633	43.14
H82B363ABH	265/1/60	35900	10519	3320	10.8	3.2	48600	2600	18.7	12.8	81	24.5	2.633	43.14
H82B363ABH	H79B35UABH	29500	8644	2800	10.5	3.1	40800	2140	19.1	13.7	80	22.0	2.633	43.14
H82B363DBE	380-415/3/50	29200	8556	2790	10.5	3.1	40900	2170	18.9	4.9	35	7.7	2.633	43.14
H82B363DBE	460/3/60	35300	10343	3290	10.7	3.1	48300	2560	18.9	4.8	34	8.1	2.633	43.14
H82B363DBF	575/3/60	35300	10343	3290	10.7	3.1	48300	2560	18.9	3.9	28	6.2	2.633	43.14
H82B363DBL	200-230/3/60	35300	10343	3290	10.7	3.1	48300	2560	18.9	9.5	68	16.0	2.633	43.14
H82B363DBL	200-220/3/50	29200	8556	2790	10.5	3.1	40900	2170	18.9	9.1	70	16	2.633	43.14

Data Subject to Revision

Model	Oil Charge OZ	Oil Charge L	Weight Net Lbs	Weight Net Kg	Weight Ship Lbs	Weight Ship Kg	ELECTRICAL START COMPONENTS Run Capacitor MFD/VOLTS	Start Capacitor MFD/VOLTS	G.E. Relay	DIMENSIONS A IN	A MM	B IN	B MM	C IN	C MM
H82B343ABC	35	1.0	71.0	32.2	74.5	33.8	40/370	189-227/250	3ARR3*3S*()	12.50	318.00	15.00	381.00	15.30	389.00
H82B343DBE	35	1.0	68.5	31.0	72.0	32.6	N/A	N/A	N/A	12.50	318.00	15.00	381.00	15.30	389.00
H82B343DBE	35	1.0	68.5	31.0	72.0	32.6	N/A	N/A	N/A	12.50	318.00	15.00	381.00	15.30	389.00
H82B343DBL	35	1.0	68.5	31.0	72.0	32.6	N/A	N/A	N/A	12.50	318.00	15.00	381.00	15.30	389.00
H82B343DBL	35	1.0	68.5	31.0	72.0	32.6	N/A	N/A	N/A	12.50	318.00	15.00	381.00	15.30	389.00
H82B363ABC	35	1.0	71.0	32.2	74.5	33.8	40/370	189-227/250	3ARR3*3S*	12.49	317.25	15.00	381.00	15.29	388.37
H82B363ABH	35	1.0	71.0	32.2	74.5	33.8	50/440	161-193/250	3ARR3*3AN*()()	12.50	318.00	15.00	381.00	15.30	389.00
H82B363ABH	35	1.0	71.0	32.2	74.5	33.8	50/440	161-193/250	3ARR3*3AN*()()	12.50	318.00	15.00	381.00	15.30	389.00
H82B363DBE	35	1.0	68.5	31.1	72.0	32.7	N/A	N/A	N/A	12.49	317.25	15.00	381.00	15.29	388.37
H82B363DBE	35	1.0	68.5	31.1	72.0	32.7	N/A	N/A	N/A	12.49	317.25	15.00	381.00	15.29	388.37
H82B363DBF	35	1.0	68.5	31.1	72.0	32.7	N/A	N/A	N/A	12.49	317.25	15.00	381.00	15.29	388.37
H82B363DBL	35	1.0	68.5	31.0	72.0	32.6	N/A	N/A	N/A	12.50	318.00	15.00	381.00	15.30	389.00
H82B363DBL	35	1.0	68.5	31.0	72.0	32.6	N/A	N/A	N/A	12.50	318.00	15.00	381.00	15.30	389.00

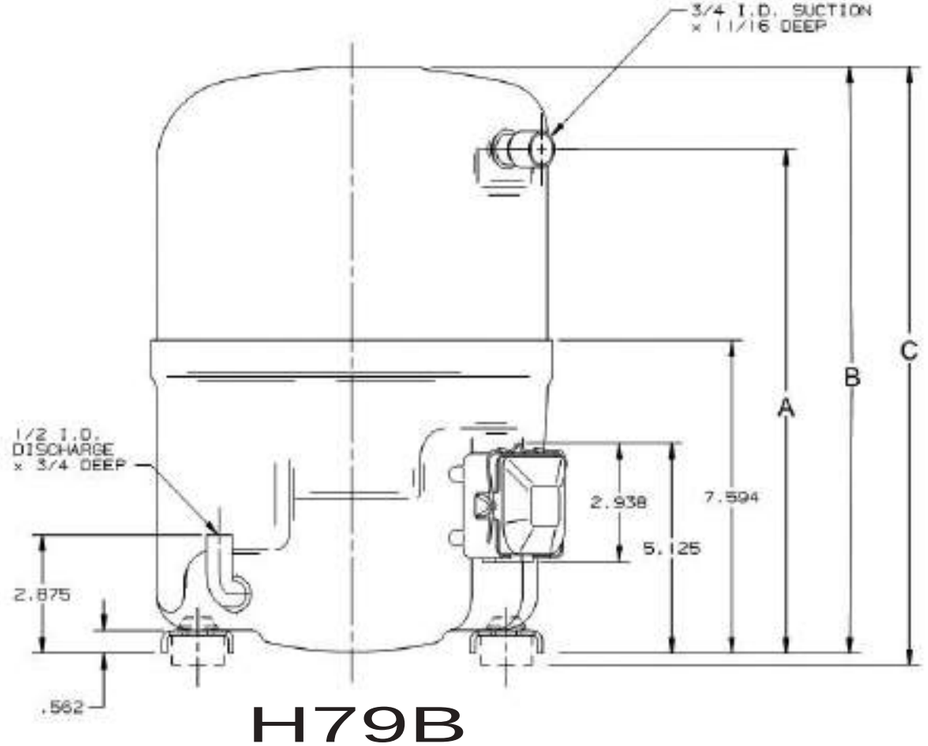

H79B

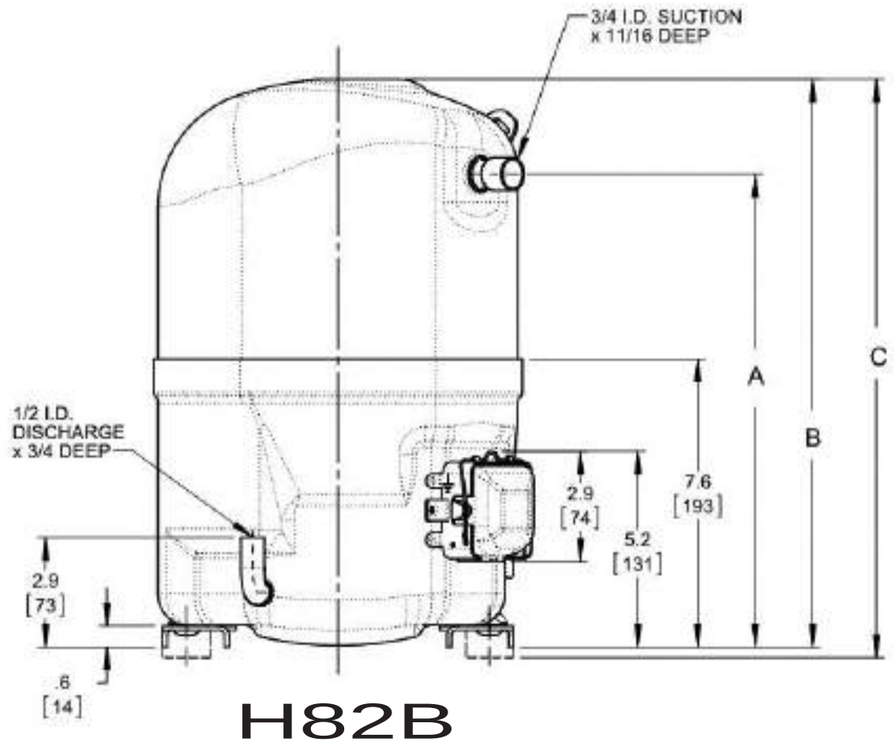

H82B

H89B *SERIES*

Model	Volts Phase Hz	@45/130 Capacity BTU/H	@45/130 Capacity WATTS	@45/130 Motor Input WATTS	@45/130 EER/COP BTU/WH	@45/130 EER/COP W/W	@45/100 Capacity BTU/H	@45/100 Motor Input WATTS	@45/100 EER BTU/WH	Electrical Data RLA	Electrical Data LRA	Electrical Data MCC	Displacement IN3/REV	Displacement CM3/REV
H89B *SERIES* (R410A)														
H89B183ABC	208-230/1/60	17700	5186	1800	9.8	2.9	26000	1460	17.8	8.2	48	14	1.506	24.67
H89B18BABC	208-230/1/60	17700	5186	1800	9.8	2.9	26000	1460	17.8	8.2	48	14	1.506	24.67
H89B223ABC	208-230/1/60	22300	6534	2260	9.9	2.9	31900	1800	17.7	10.1	60	17	1.810	29.66
H89B22BABC	208-230/1/60	22300	6534	2260	9.9	2.9	31900	1800	17.7	10.1	60	17	1.810	29.66

Data Subject to Revision

Model	Oil Charge OZ	Oil Charge L	Weight Net Lbs	Weight Net Kg	Weight Ship Lbs	Weight Ship Kg	ELECTRICAL START COMPONENTS Run Capacitor MFD/VOLTS	Start Capacitor MFD/VOLTS	G.E. Relay	DIMENSIONS A IN	A MM	B IN	B MM	C IN	C MM
H89B183ABC	30	0.9	60.0	27.2	63.5	28.8	30/370	270-324/250	3ARR3*3BA*	11.74	298.20	14.25	361.95	14.53	369.06
H89B18BABC	30	0.9	65.5	29.7	69.0	31.3	30/370	270-324/250	3ARR3 3BA	11.74	298.20	14.25	361.95	14.53	369.06
H89B223ABC	30	0.9	61.0	27.7	64.5	29.3	35/370	270-324/250	3ARR3*3BA*	11.74	298.20	14.25	361.95	14.53	369.06
H89B22BABC	30	0.9	66.5	30.2	70.0	31.8	35/370	270-324/250	3ARR3*3BA*	11.74	298.20	14.25	361.95	14.53	369.06

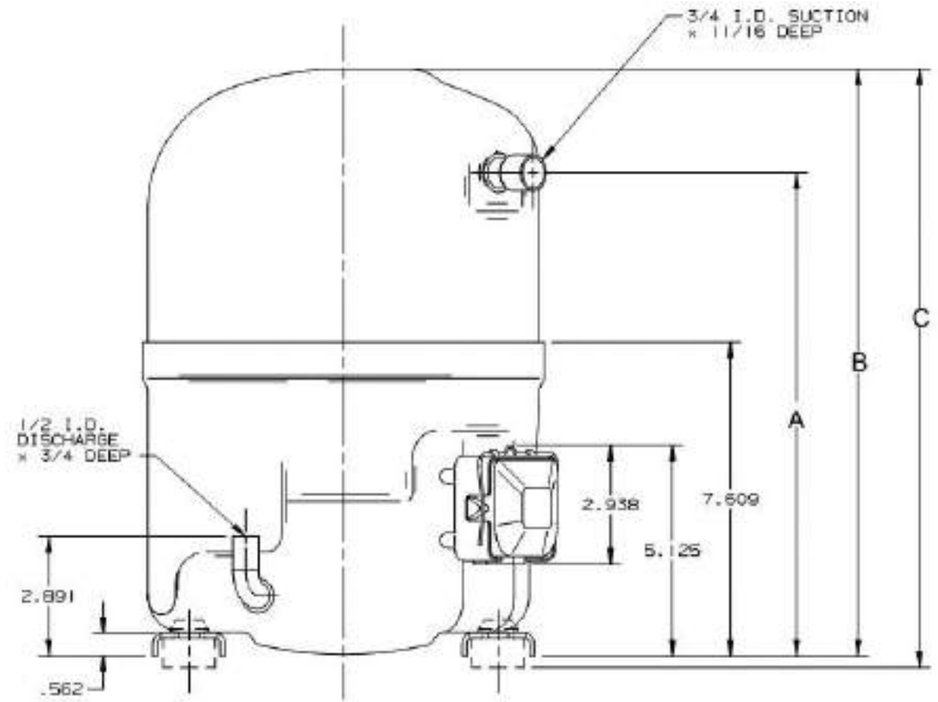

H89B

H22G *SERIES*

Model	Volts Phase Hz	@45/130 Capacity BTU/H	@45/130 Capacity WATTS	@45/130 Motor Input WATTS	@45/130 EER/COP BTU/WH	@45/130 EER/COP W/W	@45/100 Capacity BTU/H	@45/100 Motor Input WATTS	@45/100 EER BTU/WH	Electrical Data RLA	Electrical Data LRA	Electrical Data MCC	Displacement IN3/REV	Displacement CM3/REV
H22G *SERIES* (R22)														
H22G094DBD	208-230-3-60	90500	26555	8380	10.8	3.2	114778	6162	18.6	25.2	190	41	9.99	163.7
H22G094DBD	200-220/3/50	75417	22129	6983	10.8	3.2	95649	5135	18.6	25.2	190	41	9.99	163.7
H22G094DBE	380-415/3/50	72400	21213	7020	10.3	3.0	100323	6147	21.2	12	72	18	9.99	163.7
H22G094DBE	460/3/60	88700	25989	8580	10.3	3.0	118016	6912	20.9	12.3	72	19	9.99	163.7
H22G094GPD	200-220/3/50	70000	20510	7100	9.9	2.9	95246	6058	15.7	26	140	41.4	9.99	163.7
H22G094GPD	208-230-3-60	87700	25696	8680	10.1	3.0	119353	7411	16.1	25.3	140	41.4	9.99	163.7
H22G094GPE	380-415/3/50	70000	20510	7100	9.9	2.9	95246	6058	15.7	11.9	66	20.7	9.99	163.7
H22G094GPE	460/3/60	87700	25696	8680	10.1	3.0	119353	7411	14.7	12.7	70	20.7	9.99	163.7
H22G104DBD	208-230-3-60	102000	29929	9445	10.8	3.2	125877	6866	18.0	29.8	228	52	11.19	183.29
H22G104DBD	200-220/3/50	85000	24941	7871	10.8	3.2	104697	5705	18.4	29.8	228	52	11.19	183.29
H22G104DBE	380-415/3/50	84400	24729	8150	10.4	3.0	114231	6707	17.0	14.2	77	20.2	11.19	183.29
H22G104DBE	460-3-60	103900	30443	10030	10.4	3.0	130782	8057	16.2	14.6	87	22	11.19	183.29
H22G124DBD	200-220/3/50	100000	29300	9920	10.1	3.0	130286	8167	18.9	36	215	51	12.61	206.57
H22G124DBD	208-230-3-60	121500	35600	12030	10.1	3.0	156344	9923	15.7	36	205	56	12.61	206.57
H22G124DBE	380-415/3/50	97000	28421	9790	9.9	2.9	126417	8058	15.6	16.5	80	25	12.61	206.57
H22G124DBE	460/3/60	119000	34867	12010	9.9	2.9	156814	9758	16.0	17	85	25	12.61	206.57
H22G124GPD	200-220/3/50	99400	29124	10160	9.8	2.9	131434	8506	15.4	37	192	56.3	12.61	206.57
H22G124GPD	208-230-3-60	119400	34984	12380	9.6	2.8	157867	10365	15.2	36	192	59	12.61	206.57
H22G124GPE	380-415/3/50	99400	29124	10160	9.8	2.9	134434	8506	15.4	17.1	90	29.5	12.61	206.57
H22G124GPE	460/3/60	119400	34984	12380	9.6	2.8	157867	10365	15.23	18.1	96	29.5	12.61	206.57
H22G144DBD	208-230-3-60	140000	41079	13860	10.1	3.0	181781	11514	15.8	43.1	252	69	15.05	246.47
H22G144DBD	200-220/3/50	116667	34233	11550	10.1	3.0	151485	9595	15.8	43.1	252	69	15.05	246.47
H22G144DBE	460/3/60	140000	41079	13860	10.1	3.0	181781	11514	15.8	21.6	126	34.5	15.05	246.47
H22G144DBE	380-415/3/50	116700	34193	11550	10.1	3.0	151485	9595	16.9	21.6	126	34.5	15.05	246.47
H22G184DPD	208-230-3-60	183200	53755	17740	10.3	3.0	240628	14222	16.9	51.8	234	80	20.44	334.81
H22G184DPD	200-220/3/50	147200	43192	14250	10.3	3.0	203697	11861	17.2	53.5	265	80	20.44	334.81
H22G184DPE	460/3/60	183200	53755	17740	10.3	3.0	240628	14222	16.9	25.9	117	40	20.44	334.81
H22G184DPE	380-415/3/50	147200	43192	14250	10.3	3.0	203697	11861	17.2	26	125	40	20.44	334.81
H22G184GPD	200-220/3/50	147200	43130	14250	10.3	3.0	198109	11694	16.9	53	265	88	20.44	334.81
H22G184GPD	208-230-3-60	182300	53414	17640	10.3	3.0	245276	14479	16.9	51.3	248	88	20.44	334.81
H22G184GPE	380-415/3/50	147200	43130	14250	10.3	3.0	198109	11694	16.9	24.6	126	44	20.44	334.81
H22G184GPE	460/3/60	182300	53414	17.64	10.3	3.0	245276	14479	16.9	25.6	124	44	20.44	334.81
H22G204DRE	460/3/60	212400	62323	20870	10.2	3.0	274724	17063	16.1	30	141	49	23.26	381
H22G204DRE	380-415/3/50	173680	50961	16770	10.4	3.0	233895	13773	17.0	30	150	49	23.26	381
H22G204FRD	208-230-3-60	212400	62323	20870	10.2	3.0	274724	17063	16.1	60	282	98	23.26	381
H22G204FRD	200-220/3/50	173680	50961	16770	10.4	3.0	233895	13773	17.0	62	320	98	23.26	381
H22G204GPD	200-220/3/50	173700	50894	16770	10.4	3.0	227894	13940	16.3	62	316	98	23.26	381
H22G204GPD	208-230-3-60	211800	62057	20830	10.2	3.0	277888	17309	16.05	60	300	98	23.26	381
H22G204GPE	380-415/3/50	173700	50894	16770	10.4	3.0	227894	13940	16.3	28.9	150	49	23.26	381
H22G204GPE	460/3/60	211800	62057	20830	10.2	3.0	277888	17309	16.0	30	150	49	23.26	381
H22G244DRE	460/3/60	252900	74206	25400	10.0	2.9	324489	21149	15.3	36.6	180	56	26.8	438.98
H22G244DRE	380-415/3/50	199850	58640	20220	9.9	2.9	261705	16843	15.5	36.5	190	56	26.8	438.98

Data Subject to Revision

Model	Oil Charge OZ	Oil Charge L	Weight Net Lbs	Weight Net Kg	Weight Ship Lbs	Weight Ship Kg	ELECTRICAL START COMPONENTS Run Capacitor MFD/VOLTS	ELECTRICAL START COMPONENTS Start Capacitor MFD/VOLTS	ELECTRICAL START COMPONENTS G.E. Relay	DIMENSIONS A IN	DIMENSIONS A MM	DIMENSIONS B IN	DIMENSIONS B MM	DIMENSIONS C IN	DIMENSIONS C MM
H22G094DBD	96	2.8	146.0	66.4	155.0	70.5	N/A	N/A	N/A	9.00	228.40	18.30	465.50	18.70	473.60
H22G094DBD	96	2.8	146.0	66.4	155.0	70.5	N/A	N/A	N/A	9.00	228.40	18.30	465.50	18.70	473.60
H22G094DBE	96	2.8	128.0	58.1	138.0	62.6	N/A	N/A	N/A	9.00	228.60	17.60	447.04	17.90	454.66
H22G094DBE	96	2.8	128.0	58.1	138.0	62.6	N/A	N/A	N/A	9.00	228.60	17.60	447.04	17.90	454.66
H22G094GPD	96	0.0	152.0	68.9	161.0	73.0	N/A	N/A	N/A	9.00	228.60	17.09	434.09	17.40	441.96
H22G094GPD	96	0.0	152.0	68.9	161.0	73.0	N/A	N/A	N/A	9.00	228.60	17.09	434.09	17.40	441.96
H22G094GPE	96	2.8	152.0	68.9	161.0	73.0	N/A	N/A	N/A	9.00	228.60	17.09	434.09	17.40	441.96
H22G094GPE	96	2.8	152.0	68.9	161.0	73.0	N/A	N/A	N/A	9.00	228.60	17.09	434.09	17.40	441.96
H22G104DBD	96	2.8	154.0	70.0	163.0	74.1	N/A	N/A	N/A	9.00	228.40	19.60	496.90	19.90	505.10
H22G104DBD	96	2.8	154.0	70.0	163.0	74.1	N/A	N/A	N/A	9.00	228.40	19.60	496.90	19.90	505.10
H22G104DBE	96	2.8	144.0	65.3	154.0	69.9	N/A	N/A	N/A	9.00	228.60	18.30	464.82	18.60	472.44
H22G104DBE	96	2.8	144.0	65.3	153.0	69.4	N/A	N/A	N/A	9.00	228.60	18.30	464.82	18.60	472.44
H22G124DBD	96	2.8	146.0	66.2	155.0	70.3	N/A	N/A	N/A	9.00	228.60	18.30	464.82	18.60	472.44
H22G124DBD	96	2.8	146.0	66.2	155.0	70.3	N/A	N/A	N/A	9.00	228.60	18.30	464.82	18.60	472.44
H22G124DBE	96	2.8	146.0	66.2	155.0	70.3	N/A	N/A	N/A	9.00	228.60	18.30	464.82	18.60	472.44
H22G124DBE	96	2.8	146.0	66.2	155.0	70.3	N/A	N/A	N/A	9.00	228.60	18.30	464.82	18.60	472.44
H22G124GPD	96	2.8	164.0	74.4	173.0	78.5	N/A	N/A	N/A	9.00	228.60	17.80	452.12	18.15	461.01
H22G124GPD	96	2.8	164.0	74.4	173.0	78.5	N/A	N/A	N/A	9.00	228.60	17.80	452.12	18.15	461.01
H22G124GPE	96	2.8	164.0	74.4	173.0	78.5	N/A	N/A	N/A	9.00	228.60	17.80	452.12	18.15	461.01
H22G124GPE	96	2.8	164.0	74.4	173.0	78.5	N/A	N/A	N/A	9.00	228.60	17.80	452.12	18.15	461.01
H22G144DBD	96	2.8	167.0	75.9	176.0	80.0	N/A	N/A	N/A	9.00	228.40	20.60	522.30	20.90	530.40
H22G144DBD	96	2.8	167.0	75.9	176.0	80.0	N/A	N/A	N/A	9.00	228.40	20.60	522.30	20.90	530.40
H22G144DBE	96	2.8	167.0	75.9	176.0	80.0	N/A	N/A	N/A	9.00	228.40	20.60	522.30	20.90	530.40
H22G144DBE	96	2.8	167.0	75.7	176.0	79.8	N/A	N/A	N/A	9.00	228.60	20.58	522.73	20.89	530.61
H22G184DPD	224	6.6	241.0	109.5	252.0	114.5	N/A	N/A	N/A	11.80	299.50	21.80	552.00	22.40	568.80
H22G184DPD	224	6.6	241.0	109.5	252.0	114.5	N/A	N/A	N/A	11.80	299.50	21.80	552.00	22.40	568.80
H22G184DPE	224	6.6	241.0	109.5	252.0	114.5	N/A	N/A	N/A	11.80	299.50	21.80	552.00	22.40	568.80
H22G184DPE	224	6.6	241.0	109.5	252.0	114.5	N/A	N/A	N/A	11.80	299.50	21.80	552.00	22.40	568.80
H22G184GPD	224	6.6	239.0	108.4	251.0	113.9	N/A	N/A	N/A	11.79	299.47	21.75	552.45	22.40	568.96
H22G184GPD	224	6.6	239.0	108.4	251.0	113.9	N/A	N/A	N/A	11.79	299.47	21.75	552.45	22.40	568.96
H22G184GPE	224	6.6	239.0	108.4	251.0	113.9	N/A	N/A	N/A	11.79	299.47	21.75	552.45	22.40	568.96
H22G184GPE	224	6.6	239.0	108.4	251.0	113.9	N/A	N/A	N/A	11.79	299.47	21.75	552.45	22.40	568.96
H22G204DRE	224	6.6	248.0	112.7	259.0	117.7	N/A	N/A	N/A	11.80	299.50	21.80	552.00	22.40	568.80
H22G204DRE	224	6.6	248.0	112.7	259.0	117.7	N/A	N/A	N/A	11.80	299.50	21.80	552.00	22.40	568.80
H22G204FRD	224	6.6	248.0	112.7	259.0	117.7	N/A	N/A	N/A	11.80	299.50	21.80	552.00	22.40	568.80
H22G204FRD	224	6.6	248.0	112.7	259.0	117.7	N/A	N/A	N/A	11.80	299.50	21.80	552.00	22.40	568.80
H22G204GPD	224	6.6	246.0	111.6	258.0	117.0	N/A	N/A	N/A	11.79	299.47	21.75	552.45	22.40	568.96
H22G204GPD	224	6.6	246.0	111.6	258.0	117.0	N/A	N/A	N/A	11.79	299.47	21.75	552.45	22.40	568.96
H22G204GPE	224	6.6	246.0	111.6	258.0	117.0	N/A	N/A	N/A	11.79	299.47	21.75	552.45	22.40	568.96
H22G204GPE	224	6.6	246.0	111.6	258.0	117.0	N/A	N/A	N/A	11.79	299.47	21.75	552.45	22.40	568.96
H22G244DRE	224	6.6	257.0	116.8	272.0	123.6	N/A	N/A	N/A	11.80	299.50	21.80	552.00	22.40	568.80
H22G244DRE	224	6.6	257.0	116.8	272.0	123.6	N/A	N/A	N/A	11.80	299.50	21.80	552.00	22.40	568.80

H22G244FRD	208-230-3-60	252900	74206	25400	10.0	2.9	324489	21149	15.3	73.1	360	112	26.8	438.98
H22G244FRD	200-220/3/50	199850	58640	20220	9.9	2.9	261705	16843	15.5	75	400	112	26.8	438.98
H22G244GPD	200-220/3/50	199800	58541	20210	9.9	2.9	257091	16889	15.2	75	400	124	26.8	438.98
H22G244GPD	208-230-3-60	253300	74217	25480	9.9	2.9	325806	21277	15.3	73.1	362	124	26.8	438.98
H22G244GPE	380-415/3/50	199800	58541	20210	9.9	2.9	257091	16889	15.2	35.2	188	62	26.8	438.98
H22G244GPE	460/3/60	253300	74217	25480	9.9	2.9	325806	21277	15.3	36.6	181	62	26.8	438.98
H22G294DPE	460/3/60	287300	84300	30370	9.5	2.8	364523	25633	14.2	43.9	200	69	31.02	508.11
H22G294DPE	380-415/3/50	238000	69834	25300	9.4	2.8	312204	20968	14.9	44	215	69	31.02	508.11
H22G294FPD	208-230-3-60	287300	84300	30370	9.5	2.8	364519	25633	14.2	87.7	400	138	31.02	508.11
H22G294FPD	200-220/3/50	238000	69834	25300	9.4	2.8	312204	20968	14.9	90.5	450	138	31.02	508.11

Data Subject to Revision

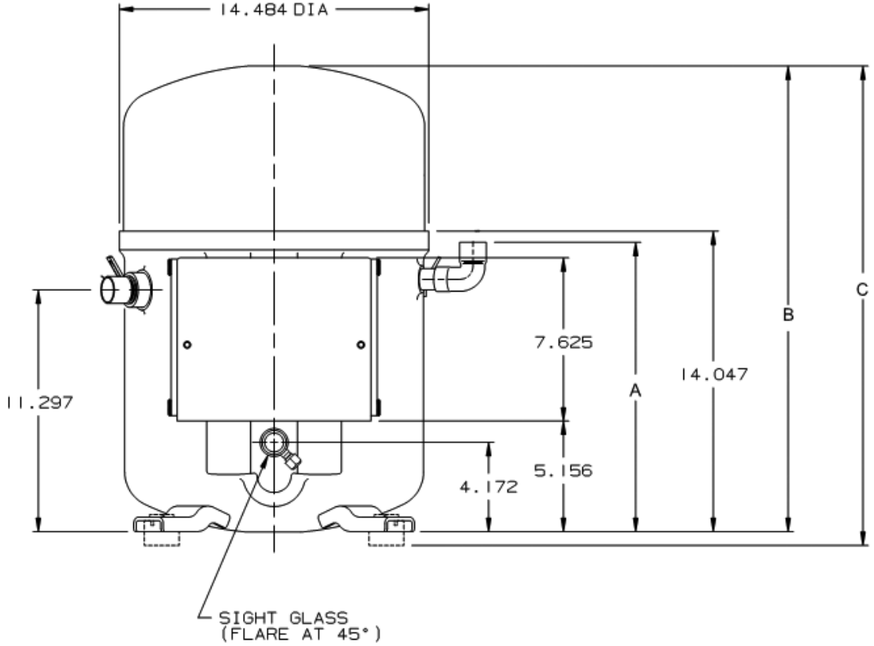

H22G

			Oil Charge		Weight Net		Weight Ship		ELECTRICAL START COMPONENTS Run Capacitor	ELECTRICAL START COMPONENTS Start Capacitor	ELECTRICAL START COMPONENTS G.E.	DIMENSIONS A		DIMENSIONS B		DIMENSIONS C	
Model			OZ	L	Lbs	Kg	Lbs	Kg	MFD/VOLTS	MFD/VOLTS	Relay	IN	MM	IN	MM	IN	MM
H22G244FRD	224	6.6	257.0	116.8	272.0	123.6	N/A	N/A	N/A	11.80	299.50	21.80	552.00	22.40	568.80
H22G244FRD	224	6.6	257.0	116.8	272.0	123.6	N/A	N/A	N/A	11.80	299.50	21.80	552.00	22.40	568.80
H22G244GPD	224	6.6	255.0	115.7	267.0	121.1	N/A	N/A	N/A	11.79	299.47	21.75	552.45	22.40	568.96
H22G244GPD	224	6.6	255.0	115.7	267.0	121.1	N/A	N/A	N/A	11.79	299.47	21.75	552.45	22.40	568.96
H22G244GPE	224	6.6	255.0	115.7	267.0	121.1	N/A	N/A	N/A	11.79	299.47	21.75	552.45	22.40	568.96
H22G244GPE	224	6.6	255.0	115.7	267.0	121.1	N/A	N/A	N/A	11.79	299.47	21.75	552.45	22.40	568.96
H22G294DPE	224	6.6	268.0	121.8	279.0	126.8	N/A	N/A	N/A	11.80	299.50	21.80	552.00	22.40	568.80
H22G294DPE	224	6.6	268.0	121.8	279.0	126.8	N/A	N/A	N/A	11.80	299.50	21.80	552.00	22.40	568.80
H22G294FPD	224	6.6	268.0	121.8	279.0	126.8	N/A	N/A	N/A	11.80	299.50	21.80	552.00	22.40	568.80
H22G294FPD	224	6.6	268.0	121.8	279.0	126.8	N/A	N/A	N/A	11.80	299.50	21.80	552.00	22.40	568.80

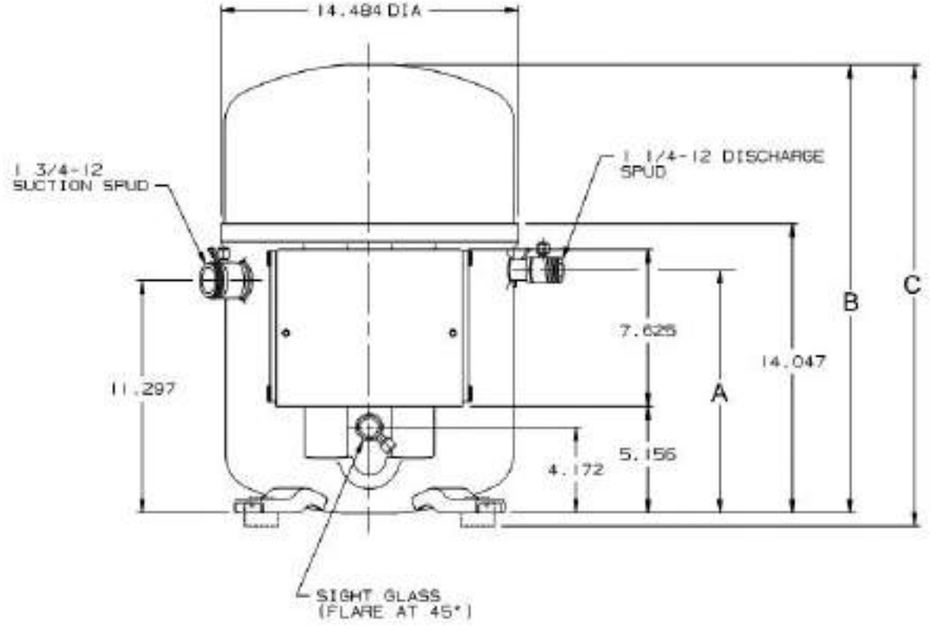

H22G

H2NG *SERIES*

Model	Volts Phase Hz	@45/130 Capacity BTU/H	@45/130 Capacity WATTS	@45/130 Motor Input WATTS	@45/130 EER/COP BTU/WH	@45/130 EER/COP W/W	@45/100 Capacity BTU/H	@45/100 Motor Input WATTS	@45/100 EER BTU/WH	Electrical Data RLA	Electrical Data LRA	Electrical Data MCC	Displacement IN3/REV	Displacement CM3/REV
H2NG *SERIES* (R22)														
H2NG094GPD-1	208-230-3-60	38900	11408	4630	8.4	2.5	55300	3560	15.5	12.7	48			
H2NG094GPD-2	208-230-3-60	87700	25718	8685	10.1	3.0	119400	7411	16.1	25.3	140	41.4	10.22	172.51
H2NG094GPD-1	200-220/3/50	29600	8680	3910	7.6	2.2	43000	2900	14.8	13	48			
H2NG094GPD-2	200-220/3/50	70000	20528	7100	9.9	2.9	95250	6100	15.6	26	140	41.4	10.22	172.51
H2NG094GPE-1	460/3/60	38900	11408	4630	8.4	2.5	55300	3560	15.5	6.4	24			
H2NG094GPE-2	460/3/60	87700	25718	8685	10.1	3.0	119400	7411	16.1	12.7	70	20.7	10.22	172.51
H2NG094GPE-1	380-415/3/50	29600	8680	3910	7.6	2.2	43000	2900	14.8	7.3	23			
H2NG094GPE-2	380-415/3/50	70000	20528	7100	9.9	2.9	95250	6100	15.6	11.9	66	20.7	10.22	172.51
H2NG094GPF-1	575/3/60	38900	11408	4630	8.4	2.5	55850	7410	7.5	5.1	19			
H2NG094GPF-2	575/3/60	87700	25718	8685	10.1	3.0	119400	7850	15.2	10.2	56	16.6	10.22	172.51
H2NG094GPF-1	500/3/50	29600	8680	3910	7.6	2.2	43000	2900	14.8	20	6			
H2NG094GPF-2	500/3/50	70000	20528	7100	9.9	2.9	95250	6100	15.6	58	10	16.6	10.22	172.51
H2NG104GPD-1	208-230-3-60	45200	13255	5195	8.7	2.5	66300	3990	16.6	15	56			
H2NG104GPD-2	208-230-3-60	101800	29853	10335	9.9	2.9	136600	8740	15.6	30	162	48	11.63	196.31
H2NG104GPD-1	200-220/3/50	36725	10770	4500	8.2	2.4	51490	3360	15.3	15.5	56			
H2NG104GPD-2	200-220/3/50	84600	24809	8325	10.2	3.0	113450	7040	16.1	31	162	48	11.63	196.31
H2NG104GPE-1	460/3/60	45200	13255	5195	8.7	2.5	66000	4000	16.5	7.5	28			
H2NG104GPE-2	460/3/60	101800	29853	10335	9.9	2.9	136600	8740	15.6	15	81	24	11.63	196.31
H2NG104GPE-1	380-415/3/50	36725	10770	4500	8.2	2.4	51490	3360	15.3	8.6	26			
H2NG104GPE-2	380-415/3/50	84600	24809	8325	10.2	3.0	113450	7040	16.1	14.3	76	24	11.63	196.31
H2NG104GPF-1	575/3/60	45200	13255	5195	8.7	2.5	66000	4000	16.5	6	22			
H2NG104GPF-2	575/3/60	101800	29853	10335	9.9	2.9	136600	8740	15.6	12	65	19.2	11.63	196.31
H2NG104GPF-1	500-3-50	36725	10770	4500	8.2	2.4	51490	3360	15.3	23	6			
H2NG104GPF-2	500/3/50	84600	24809	8325	10.2	3.0	113450	7040	16.1	68	12	19.2	11.63	196.31
H2NG124GPD-1	208-230-3-60	54600	16012	6350	8.6	2.5	75500	4702	16.1	18.1	66			
H2NG124GPD-2	208-230-3-60	119400	35015	12380	9.6	2.8	157900	10400	15.2	36.2	192	56.3	13.94	235.37
H2NG124GPD-1	200-220/3/50	43800	12845	5470	8.0	2.3	60900	4110	14.8	18.5	66			
H2NG124GPD-2	200-220/3/50	99400	29150	10160	9.8	2.9	131450	8510	15.4	37	192	56.3	13.94	235.31
H2NG124GPE-1	460/3/60	54600	16012	6350	8.6	2.5	75500	4702	16.1	9.1	33			
H2NG124GPE-2	460/3/60	119400	35015	12380	9.6	2.8	157900	10400	15.2	18.1	96	18.1	13.94	235.31
H2NG124GPE-1	380-415/3/50	43800	12845	5470	8.0	2.3	60900	4110	14.8	10.2	33			
H2NG124GPE-2	380-415/3/50	99400	29150	10160	9.8	2.9	131450	8510	15.4	17.1	90	29.5	13.94	235.31
H2NG124GPF-1	575/3/60	54600	16012	6350	8.6	2.5	75500	4702	16.1	14.5	77			
H2NG124GPF-2	575/3/60	119400	35015	12380	9.6	2.8	157900	10400	15.2	7.3	26	23.6	13.94	235.37
H2NG124GPF-1	500/3/50	43800	12845	5470	8.0	2.3	60900	4110	14.8	27	7			
H2NG124GPF-2	500-3-50	99400	29150	10160	9.8	2.9	131450	8510	15.4	80	15	23.6	13.4	226.19
H2NG184GPD-1	208-230-3-60	80240	23544	8630	9.3	2.7	115528	6705	17.2	25.6	89			
H2NG184GPD-2	208-230-3-60	183200	53755	17740	10.3	3.0	245276	14479	16.9	51.3	248	88	20.44	334.81
H2NG184GPD-1	200-220/3/50	66025	19373	7310	9.0	2.6	198109	11694	16.9	26.5	92			
H2NG184GPD-2	200-220/3/50	147200	43192	14250	10.3	3.0	90293	5535	16.3	53	265	88	20.44	334.81
H2NG184GPE-1	460/3/60	80240	23544	8630	9.3	2.7	115330	6697	17.2	12.8	45			
H2NG184GPE-2	460/3/60	183200	53755	17740	10.3	3.0	245314	14480	16.9	20.5	100	35.2	20.44	334.79
H2NG184GPE-1	380-415/3/50	66025	19373	7310	9.0	2.6	90293	5535	16.3	14	44			
H2NG184GPE-2	380-415/3/50	147200	43192	14250	10.3	3.0	198109	11694	16.9	24.6	126	44	20.44	334.81

Data Subject to Revision

Model	Oil Charge OZ	Oil Charge L	Weight Net Lbs	Weight Net Kg	Weight Ship Lbs	Weight Ship Kg	ELECTRICAL START COMPONENTS Run Capacitor MFD/VOLTS	ELECTRICAL START COMPONENTS Start Capacitor MFD/VOLTS	ELECTRICAL START COMPONENTS G.E. Relay	DIMENSIONS A IN	DIMENSIONS A MM	DIMENSIONS B IN	DIMENSIONS B MM	DIMENSIONS C IN	DIMENSIONS C MM
H2NG094GPD	112	3.3	153.0	69.5	162.0	73.6	N/A	N/A	N/A	9.00	228.60	17.10	434.20	17.40	442.10
H2NG094GPD	112	3.3	153.0	69.5	162.0	73.6	N/A	N/A	N/A	9.00	228.60	17.10	434.20	17.40	442.10
H2NG094GPD	112	3.3	153.0	69.5	162.0	73.6	N/A	N/A	N/A	9.00	228.60	17.10	434.20	17.40	442.10
H2NG094GPD	112	3.3	153.0	69.5	162.0	73.6	N/A	N/A	N/A	9.00	228.60	17.10	434.20	17.40	442.10
H2NG094GPE	112	3.3	153.0	69.5	162.0	73.6	N/A	N/A	N/A	9.00	228.60	17.10	434.20	17.40	442.10
H2NG094GPE	112	3.3	153.0	69.5	162.0	73.6	N/A	N/A	N/A	9.00	228.60	17.10	434.20	17.40	442.10
H2NG094GPE	112	3.3	153.0	69.5	162.0	73.6	N/A	N/A	N/A	9.00	228.60	17.10	434.20	17.40	442.10
H2NG094GPE	112	3.3	153.0	69.5	162.0	73.6	N/A	N/A	N/A	9.00	228.60	17.10	434.20	17.40	442.10
H2NG094GPF	112	3.3	153.0	69.5	162.0	73.6	N/A	N/A	N/A	9.00	228.60	17.10	434.20	17.40	442.10
H2NG094GPF	112	3.3	153.0	69.5	162.0	73.6	N/A	N/A	N/A	9.00	228.60	17.10	434.20	17.40	442.10
H2NG094GPF	112	3.3	153.0	69.5	162.0	73.6	N/A	N/A	N/A	9.00	228.60	17.10	434.20	17.40	442.10
H2NG094GPF	112	3.3	153.0	69.5	162.0	73.6	N/A	N/A	N/A	9.00	228.60	17.10	434.20	17.40	442.10
H2NG104GPD	112	3.3	157.0	71.4	166.0	75.5	N/A	N/A	N/A	9.00	228.60	17.10	434.20	17.40	442.10
H2NG104GPD	112	3.3	157.0	71.4	166.0	75.5	N/A	N/A	N/A	9.00	228.60	17.10	434.20	17.40	442.10
H2NG104GPD	112	3.3	157.0	71.4	166.0	75.5	N/A	N/A	N/A	9.00	228.60	17.10	434.20	17.40	442.10
H2NG104GPD	112	3.3	157.0	71.4	166.0	75.5	N/A	N/A	N/A	9.00	228.60	17.10	434.20	17.40	442.10
H2NG104GPE	112	3.3	157.0	71.4	166.0	75.5	N/A	N/A	N/A	9.00	228.60	17.10	434.20	17.40	442.10
H2NG104GPE	112	3.3	157.0	71.4	166.0	75.5	N/A	N/A	N/A	9.00	228.60	17.10	434.20	17.40	442.10
H2NG104GPE	112	3.3	157.0	71.4	166.0	75.5	N/A	N/A	N/A	9.00	228.60	17.10	434.20	17.40	442.10
H2NG104GPE	112	3.3	157.0	71.4	166.0	75.5	N/A	N/A	N/A	9.00	228.60	17.10	434.20	17.40	442.10
H2NG104GPF	112	3.3	157.0	71.4	166.0	75.5	N/A	N/A	N/A	9.00	228.60	17.10	434.20	17.40	442.10
H2NG104GPF	112	3.3	157.0	71.4	166.0	75.5	N/A	N/A	N/A	9.00	228.60	17.10	434.20	17.40	442.10
H2NG104GPF	112	3.3	157.0	71.4	166.0	75.5	N/A	N/A	N/A	9.00	228.60	17.10	434.20	17.40	442.10
H2NG104GPF	112	3.3	157.0	71.4	166.0	75.5	N/A	N/A	N/A	9.00	228.60	17.10	434.20	17.40	442.10
H2NG124GPD	112	3.3	165.0	75.0	174.0	79.1	N/A	N/A	N/A	9.00	228.60	17.80	453.20	18.20	461.20
H2NG124GPD	112	3.3	165.0	75.0	174.0	79.1	N/A	N/A	N/A	9.00	228.60	17.80	453.20	18.20	461.20
H2NG124GPD	112	3.3	165.0	75.0	174.0	79.1	N/A	N/A	N/A	9.00	228.60	17.80	453.20	18.20	461.20
H2NG124GPD	112	3.3	165.0	75.0	174.0	79.1	N/A	N/A	N/A	9.00	228.60	17.80	453.20	18.20	461.20
H2NG124GPE	112	3.3	165.0	75.0	174.0	79.1	N/A	N/A	N/A	9.00	228.60	17.80	453.20	18.20	461.20
H2NG124GPE	112	3.3	165.0	75.0	174.0	79.1	N/A	N/A	N/A	9.00	228.60	17.80	453.20	18.20	461.20
H2NG124GPE	112	3.3	165.0	75.0	174.0	79.1	N/A	N/A	N/A	9.00	228.60	17.80	453.20	18.20	461.20
H2NG124GPE	112	3.3	165.0	75.0	174.0	79.1	N/A	N/A	N/A	9.00	228.60	17.80	453.20	18.20	461.20
H2NG124GPF	112	3.3	165.0	75.0	174.0	79.1	N/A	N/A	N/A	9.00	228.60	17.80	453.20	18.20	461.20
H2NG124GPF	112	3.3	165.0	75.0	174.0	79.1	N/A	N/A	N/A	9.00	228.60	17.80	453.20	18.20	461.20
H2NG124GPF	112	3.3	165.0	75.0	174.0	79.1	N/A	N/A	N/A	9.00	228.60	17.80	453.20	18.20	461.20
H2NG124GPF	112	3.3	165.0	75.0	174.0	79.1	N/A	N/A	N/A	9.00	228.60	17.80	453.20	18.20	461.20
H2NG184GPD	256	7.6	241.0	109.5	252.0	114.5	N/A	N/A	N/A	11.80	299.50	21.80	552.00	22.40	568.80
H2NG184GPD	256	7.6	241.0	109.5	252.0	114.5	N/A	N/A	N/A	11.80	299.50	21.80	552.00	22.40	568.80
H2NG184GPD	256	7.6	241.0	109.5	252.0	114.5	N/A	N/A	N/A	11.80	299.50	21.80	552.00	22.40	568.80
H2NG184GPD	256	7.6	241.0	109.5	252.0	114.5	N/A	N/A	N/A	11.80	299.50	21.80	552.00	22.40	568.80
H2NG184GPE	256	7.6	241.0	109.5	252.0	114.5	N/A	N/A	N/A	11.80	299.50	21.80	552.00	22.40	568.80
H2NG184GPE	256	7.6	241.0	109.5	253.0	115.0	N/A	N/A	N/A	11.80	299.50	21.80	552.00	22.40	568.80
H2NG184GPE	256	7.6	241.0	109.5	252.0	114.5	N/A	N/A	N/A	11.80	299.50	21.80	552.00	22.40	568.80
H2NG184GPE	256	7.6	241.0	109.5	252.0	114.5	N/A	N/A	N/A	11.80	299.50	21.80	552.00	22.40	568.80

H2NG *SERIES*

Model	Volts Phase Hz	@45/130 Capacity BTU/H	@45/130 Capacity WATTS	@45/130 Motor Input WATTS	@45/130 EER/COP BTU/WH	@45/130 EER/COP W/W	@45/100 Capacity BTU/H	@45/100 Motor Input WATTS	@45/100 EER BTU/WH	Electrical Data RLA	Electrical Data LRA	Electrical Data MCC	Displacement IN3/REV	Displacement CM3/REV
H2NG *SERIES* (R22)														
H2NG184GPE-2	380-415/3/50	147200	43192	14250	10.3	3.0	198109	11694	19.9	24.6	126	44	20.44	334.81
H2NG184GPF-1	575/3/60	80240	23544	8630	9.3	2.7	115330	6697	17.2	10.3	36			
H2NG184GPF-2	575/3/60	183200	53755	17740	10.3	3.0	245314	14480	16.9	20.5	100	35.2	20.44	334.79
H2NG184GPF-1	500/3/50	66025	19373	7310	9.0	2.6	90293	5535	16.3	38	10			
H2NG184GPF-2	500/3/50	147200	43192	14250	10.3	3.0	198109	11694	16.9	104	21	35.2	20.44	334.79
H2NG204GPD-1	208-230-3-60	97200	28521	10125	9.6	2.8	134534	7854	17.1	30	108			
H2NG204GPD-2	208-230-3-60	212400	62323	20870	10.2	3.0	277888	17309	16.1	60	300	98	23.26	380.98
H2NG204GPD-1	200-220/3/50	80140	23515	8490	9.4	2.8	106557	6518	16.3	31	116			
H2NG204GPD-2	200-220/3/50	173680	50961	16670	10.4	3.0	227893	13940	16.3	62	316	98	23.26	381
H2NG204GPE-1	460/3/60	97200	28521	10125	9.6	2.8	134188	7855	17.1	15	54			
H2NG204GPE-2	460/3/60	212400	62323	20870	10.2	3.0	277886	17314	16	24	120	39.2	23.26	380.98
H2NG204GPE-1	380-415/3/50	80140	23515	8490	9.4	2.8	106286	6519	16.3	16.4	55			
H2NG204GPE-2	380-415/3/50	173680	50961	16770	10.4	3.0	227893	13940	16.3	38.9	150	49	23.26	381
H2NG204GPF-1	575/3/60	97200	28521	10125	9.6	2.8	134188	7855	17.1	12	44			
H2NG204GPF-2	575/3/60	212400	62323	20870	10.2	3.0	277886	17314	16.0	24	120	39.2	23.26	380.98
H2NG204GPF-1	500/3/50	80140	23515	8490	9.4	2.8	106286	6519	16.3	46	12			
H2NG204GPF-2	500/3/50	173680	50961	16770	10.4	3.0	227893	13940	16.3	125	25	39.2	23.26	380.98
H2NG244GPD-1	208-230-3-60	114500	33597	11800	9.7	2.8	158494	9351	16.9	36.5	124			
H2NG244GPD-2	208-230-3-60	252900	74206	25400	10.0	2.9	325806	21277	15.3	73.1	362	124	26.79	438.82
H2NG244GPD-1	200-220/3/50	88000	25821	10180	8.6	2.5	117569	7959	14.8	37.5	133			
H2NG244GPD-2	200-220/3/50	199850	58640	20220	9.9	2.9	257091	16889	15.2	75	400	124	26.79	438.82
H2NG244GPE-1	460/3/60	114500	33597	11800	9.7	2.8	158529	9337	17.0	18.3	62			
H2NG244GPE-2	460/3/60	252900	74206	25400	10.0	2.9	325824	21284	15.3	29.3	145	54.2	26.79	438.8
H2NG244GPE-1	380-415/3/50	88000	25821	10180	8.6	2.5	117569	7959	14.8	19.6	63			
H2NG244GPE-2	380-415/3/50	199850	58640	20220	9.9	2.9	257091	16889	15.2	35.2	188	62	26.79	438.82
H2NG244GPF-1	575/3/60	114500	33597	11800	9.7	2.8	158529	9337	17.0	14.7	50			
H2NG244GPF-2	575/3/60	252900	74206	25400	10.0	2.9	325824	21284	15.3	29.3	145	54.2	26.79	438.8
H2NG244GPF-1	500/3/50	88000	25821	10180	8.6	2.5	117569	7959	14.8	52	14			
H2NG244GPF-2	500/3/50	199850	58640	20220	9.9	2.9	257091	16889	15.2	151	30	54.2	26.8	439

Data Subject to Revision

Model	Oil Charge OZ	Oil Charge L	Weight Net Lbs	Weight Net Kg	Weight Ship Lbs	Weight Ship Kg	ELECTRICAL START COMPONENTS Run Capacitor MFD/VOLTS	ELECTRICAL START COMPONENTS Start Capacitor MFD/VOLTS	ELECTRICAL START COMPONENTS G.E. Relay	DIMENSIONS A IN	DIMENSIONS A MM	DIMENSIONS B IN	DIMENSIONS B MM	DIMENSIONS C IN	DIMENSIONS C MM
H2NG184GPE	256	7.6	241.0	109.5	252.0	114.5	N/A	N/A	N/A	11.80	299.50	21.80	552.00	22.40	568.80
H2NG184GPF	256	7.6	241.0	109.5	253.0	115.0	N/A	N/A	N/A	11.80	299.50	21.80	552.00	22.40	568.80
H2NG184GPF	256	7.6	241.0	109.5	253.0	115.0	N/A	N/A	N/A	11.80	299.50	21.80	552.00	22.40	568.80
H2NG184GPF	256	7.6	241.0	109.5	252.0	114.5	N/A	N/A	N/A	11.80	299.50	21.80	552.00	22.40	568.80
H2NG184GPF	256	7.6	241.0	109.5	253.0	115.0	N/A	N/A	N/A	11.80	299.50	21.80	552.00	22.40	568.80
H2NG204GPD	256	7.6	248.0	112.7	259.0	117.7	N/A	N/A	N/A	11.80	299.50	21.80	552.00	22.40	568.80
H2NG204GPD	256	7.6	248.0	112.7	259.0	117.7	N/A	N/A	N/A	11.80	299.50	21.80	552.00	22.40	568.80
H2NG204GPD	256	7.6	248.0	112.7	259.0	117.7	N/A	N/A	N/A	11.80	299.50	21.80	552.00	22.40	568.80
H2NG204GPD	256	7.6	248.0	112.7	259.0	117.7	N/A	N/A	N/A	11.80	299.50	21.80	552.00	22.40	568.80
H2NG204GPE	256	7.6	248.0	112.7	259.0	117.7	N/A	N/A	N/A	11.80	299.50	21.80	552.00	22.40	568.80
H2NG204GPE	256	7.6	248.0	112.7	260.0	118.2	N/A	N/A	N/A	11.80	299.50	21.80	552.00	22.40	568.80
H2NG204GPE	224	6.6	248.0	112.7	259.0	117.7	N/A	N/A	N/A	11.80	299.50	21.80	552.00	22.40	568.80
H2NG204GPE	256	7.6	248.0	112.7	259.0	117.7	N/A	N/A	N/A	11.80	299.50	21.80	552.00	22.40	568.80
H2NG204GPF	256	7.6	248.0	112.7	260.0	118.2	N/A	N/A	N/A	11.80	299.50	21.80	552.00	22.40	568.80
H2NG204GPF	256	7.6	248.0	112.7	260.0	118.2	N/A	N/A	N/A	11.80	299.50	21.80	552.00	22.40	568.80
H2NG204GPF	256	7.6	248.0	112.7	260.0	118.2	N/A	N/A	N/A	11.80	299.50	21.80	552.00	22.40	568.80
H2NG204GPF	256	7.6	248.0	112.7	260.0	118.2	N/A	N/A	N/A	11.80	299.50	21.80	552.00	22.40	568.80
H2NG244GPD	256	7.6	257.0	116.8	272.0	123.6	N/A	N/A	N/A	11.80	299.50	21.80	552.00	22.40	568.80
H2NG244GPD	256	7.6	257.0	116.8	272.0	123.6	N/A	N/A	N/A	11.80	299.50	21.80	552.00	22.40	568.80
H2NG244GPD	256	7.6	257.0	116.8	272.0	123.6	N/A	N/A	N/A	11.80	299.50	21.80	552.00	22.40	568.80
H2NG244GPD	256	7.6	257.0	116.8	272.0	123.6	N/A	N/A	N/A	11.80	299.50	21.80	552.00	22.40	568.80
H2NG244GPE	256	7.6	257.0	116.8	272.0	123.6	N/A	N/A	N/A	11.80	299.50	21.80	552.00	22.40	568.80
H2NG244GPE	256	7.6	257.0	116.8	272.0	123.6	N/A	N/A	N/A	11.80	299.50	21.80	552.00	22.40	568.80
H2NG244GPE	256	7.6	257.0	116.8	272.0	123.6	N/A	N/A	N/A	11.80	299.50	21.80	552.00	22.40	568.80
H2NG244GPE	256	7.6	257.0	116.8	272.0	123.6	N/A	N/A	N/A	11.80	299.50	21.80	552.00	22.40	568.80
H2NG244GPF	256	7.6	257.0	116.8	272.0	123.6	N/A	N/A	N/A	11.80	299.50	21.80	552.00	22.40	568.80
H2NG244GPF	256	7.6	257.0	116.8	272.0	123.6	N/A	N/A	N/A	11.80	299.50	21.80	552.00	22.40	568.80
H2NG244GPF	256	7.6	257.0	116.8	272.0	123.6	N/A	N/A	N/A	11.80	299.50	21.80	552.00	22.40	568.80
H2NG244GPF	256	7.6	257.0	116.8	269.0	122.3	N/A	N/A	N/A	11.80	299.50	21.80	552.00	22.40	568.80

H75G *SERIES*

Model	Volts Phase Hz	@45/130 Capacity BTU/H	@45/130 Capacity WATTS	@45/130 Motor Input WATTS	@45/130 EER/COP BTU/WH	@45/130 EER/COP W/W	@45/100 Capacity BTU/H	@45/100 Motor Input WATTS	@45/100 EER BTU/WH	Electrical Data RLA	Electrical Data LRA	Electrical Data MCC	Displacement IN3/REV	Displacement CM3/REV
H75G *SERIES (R407C)*														
H75G094DBE	380-415/3/50	69900	20481	6490	10.8	3.2	108800	5460	19.9	12.6	95	20.5	10.22	167.45
H75G094DBE	460/3/60	83900	24583	7790	10.8	3.2	130600	6560	19.9	12.7	95	20.5	10.22	167.45
H75G124DBE	380-415/3/50	94300	27630	8520	11.1	3.3	139500	7060	19.8	17	130	33	12.61	206.61
H75G124DBE	460/3/60	113100	33138	10220	11.1	3.3	167400	8470	19.8	17	130	33	12.61	206.61
H75G144DBD	208-230-3-60	135000	39555	12920	10.5	3.1	206000	11240	18.3	43.1	252	69	15.05	246.58
H75G144DBE	380-415/3/50	112500	32963	10760	10.5	3.1	171700	9370	18.3	21.6	126	34.5	15.05	246.58
H75G144DBE	460/3/60	135000	39555	12920	10.5	3.1	206000	11240	18.3	21.6	126	34.5	15.05	246.58

Data Subject to Revision

Model	Oil Charge OZ	Oil Charge L	Weight Net Lbs	Weight Net Kg	Weight Ship Lbs	Weight Ship Kg	ELECTRICAL START COMPONENTS Run Capacitor MFD/VOLTS	Start Capacitor MFD/VOLTS	G.E. Relay	DIMENSIONS A IN	A MM	B IN	B MM	C IN	C MM
H75G094DBE	96	2.8	146.0	66.2	155.0	70.3	N/A	N/A	N/A	15.96	405.38	18.34	465.84	18.65	473.71
H75G094DBE	96	2.8	146.0	66.2	155.0	70.3	N/A	N/A	N/A	15.96	405.38	18.34	465.84	18.65	473.71
H75G124DBE	96	2.8	164.0	74.4	173.0	78.5	N/A	N/A	N/A	17.95	455.93	20.33	516.38	20.65	524.51
H75G124DBE	96	2.8	164.0	74.4	173.0	78.5	N/A	N/A	N/A	17.95	455.93	20.33	516.38	20.65	524.51
H75G144DBD	96	2.8	167.0	75.7	176.0	79.8	N/A	N/A	N/A	18.20	462.28	20.58	522.73	20.89	530.61
H75G144DBE	96	2.8	167.0	75.7	176.0	79.8	N/A	N/A	N/A	18.20	462.28	20.58	522.73	20.89	530.61
H75G144DBE	96	2.8	167.0	75.7	176.0	79.8	N/A	N/A	N/A	18.20	462.28	20.58	522.73	20.89	530.61

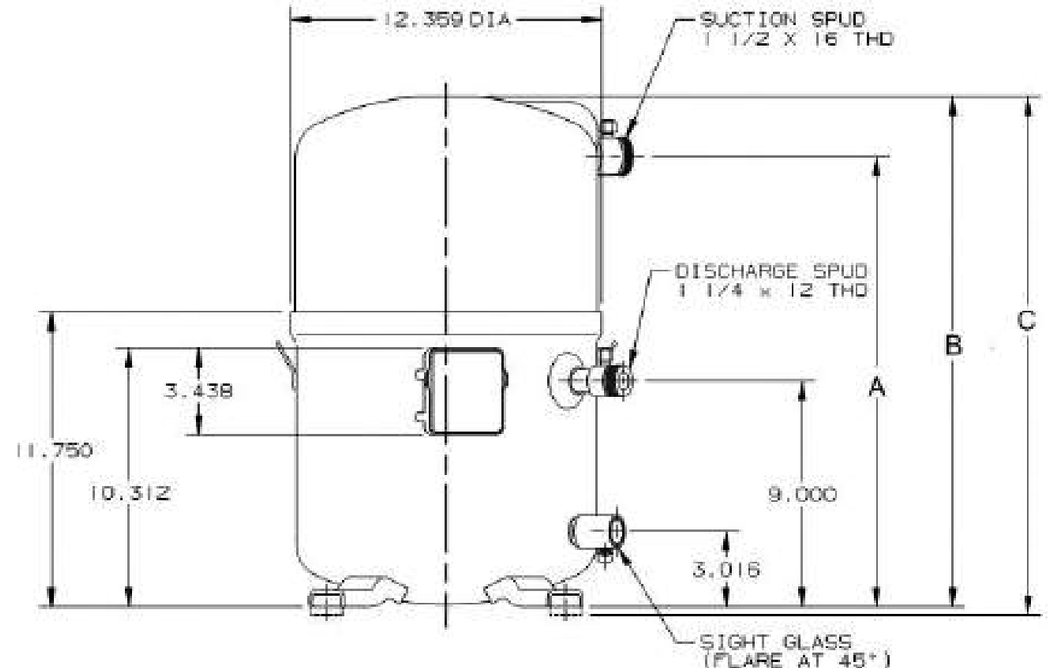

H75G

H7BG *SERIES*

Model	Volts Phase Hz	@45/130 Capacity BTU/H	@45/130 Capacity WATTS	@45/130 Motor Input WATTS	@45/130 EER/COP BTU/WH	@45/130 EER/COP W/W	@45/100 Capacity BTU/H	@45/100 Motor Input WATTS	@45/100 EER BTU/WH	Electrical Data RLA	Electrical Data LRA	Electrical Data MCC	Displacement IN3/REV	Displacement CM3/REV
H7BG *SERIES* (R407C)														
H7BG094DBD	200-220/3/50	69900	20481	6490	10.8	3.2	108800	5460	19.9	23.7	145	34.5	10.22	167.45
H7BG094DBD	208-230-3-60	83900	24583	7790	10.8	3.2	130600	6560	19.9	24	145	40	10.22	167.45
H7BG094DBE	380-415/3/50	69900	20481	6490	10.8	3.2	108800	5460	19.9	12	72	18	10.22	167.45
H7BG094DBE	460/3/60	83900	24583	7790	10.8	3.2	130600	6560	19.9	12.3	72	19	10.22	167.45
H7BG104DBD	200-220/3/50	78300	22942	7440	10.5	3.1	119700	6350	18.8	29	170	42.6	11.63	190.55
H7BG104DBD	208-230-3-60	96400	28245	9150	10.5	3.1	136600	7630	17.9	29.3	166	45	11.63	190.55
H7BG104DBE	380-415/3/50	81700	23938	7780	10.5	3.1	123500	6360	19.4	14.2	77	20.2	11.63	190.55
H7BG104DBE	460/3/60	98000	28714	9340	10.5	3.1	148300	7640	19.4	14.6	87	22	11.63	190.55
H7BG124DBD	200-220/3/50	92800	27190	9060	10.2	3.0	136300	7730	17.6	36	215	51	13.4	219.55
H7BG124DBD	208-230-3-60	112800	33050	10980	10.3	3.0	163600	9400	17.4	36	205	56	13.4	219.55
H7BG124DBE	380-415/3/50	95300	27923	9380	10.2	3.0	144100	7750	18.6	16.5	80	25	13.4	219.55

Data Subject to Revision

Model	Oil Charge OZ	Oil Charge L	Weight Net Lbs	Weight Net Kg	Weight Ship Lbs	Weight Ship Kg	ELECTRICAL START COMPONENTS Run Capacitor MFD/VOLTS	Start Capacitor MFD/VOLTS	G.E. Relay	DIMENSIONS A IN	A MM	B IN	B MM	C IN	C MM
H7BG094DBD	96	2.8	128.0	58.1	138.0	62.6	N/A	N/A	N/A	9.00	228.60	17.59	446.79	17.90	454.66
H7BG094DBD	96	2.8	128.0	58.1	138.0	62.6	N/A	N/A	N/A	9.00	228.60	17.59	446.79	17.90	454.66
H7BG094DBE	96	2.8	128.0	58.1	138.0	62.6	N/A	N/A	N/A	9.00	228.60	17.59	446.79	17.90	454.66
H7BG094DBE	96	2.8	128.0	58.1	138.0	62.6	N/A	N/A	N/A	9.00	228.60	17.59	446.79	17.90	454.66
H7BG104DBD	96	2.8	144.0	65.3	153.0	69.4	N/A	N/A	N/A	9.00	228.60	18.34	465.84	18.65	473.71
H7BG104DBD	96	2.8	144.0	65.3	153.0	69.4	N/A	N/A	N/A	9.00	228.60	18.34	465.84	18.65	473.71
H7BG104DBE	96	2.8	144.0	65.3	153.0	69.4	N/A	N/A	N/A	9.00	228.60	18.34	465.84	18.65	473.71
H7BG104DBE	96	2.8	144.0	65.3	153.0	69.4	N/A	N/A	N/A	9.00	228.60	18.34	465.84	18.65	473.71
H7BG124DBD	96	2.8	146.0	66.2	155.0	70.3	N/A	N/A	N/A	9.00	228.60	18.34	465.84	18.65	473.71
H7BG124DBD	96	2.8	146.0	66.2	155.0	70.3	N/A	N/A	N/A	9.00	228.60	18.34	465.84	18.65	473.71
H7BG124DBE	96	2.8	146.0	66.2	155.0	70.3	N/A	N/A	N/A	9.00	228.60	18.34	465.84	18.65	473.71

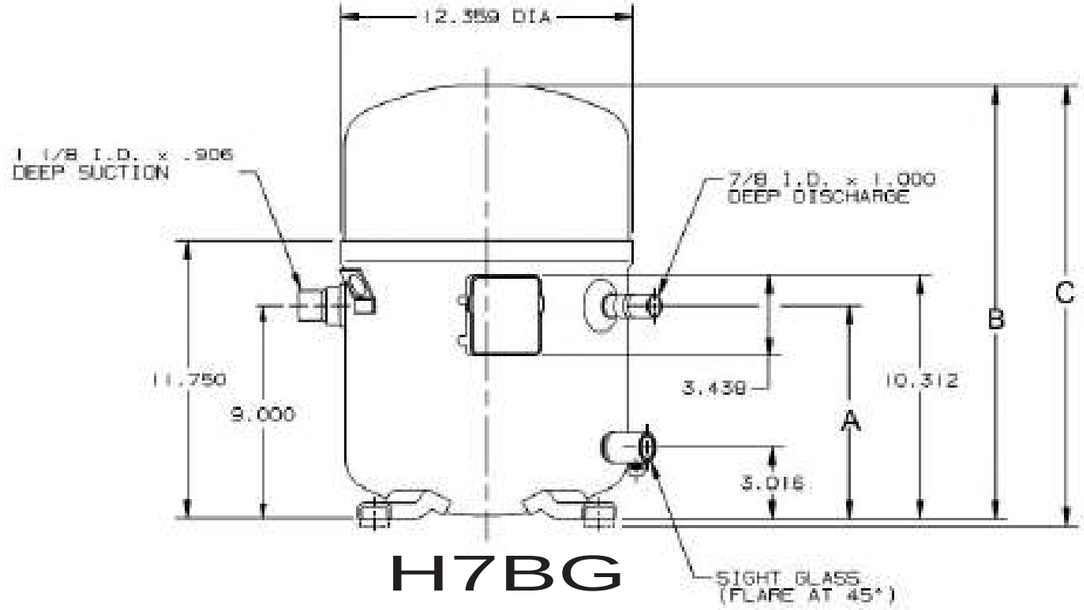

H7NG *SERIES*

Model	Volts Phase Hz	@45/130 Capacity BTU/H	@45/130 Capacity WATTS	@45/130 Motor Input WATTS	@45/130 EER/COP BTU/WH	@45/130 EER/COP W/W	@45/100 Capacity BTU/H	@45/100 Motor Input WATTS	@45/100 EER BTU/WH	Electrical Data RLA	Electrical Data LRA	Electrical Data MCC	Displacement IN3/REV	Displacement CM3/REV
H7NG *SERIES* (R407C)														
H7NG184DPD	200-220/3/50	144800	42426	13300	10.9	3.2	22400	10900	20.2	51.8	265	80	20.44	334.89
H7NG184DPD	208-230-3-60	173800	50923	15960	10.9	3.2	264400	13080	20.2	51.8	234	80	20.44	334.89
H7NG184DPE	380-415/3/50	144800	42426	13300	10.9	3.2	220400	10900	20.3	26	125	40	20.44	334.89
H7NG184DPE	460/3/60	173800	50923	15960	10.9	3.2	264400	13080	20.2	25.9	117	40	20.44	334.89
H7NG204DRE	380-415/3/50	166300	48726	15540	10.7	3.1	252100	12840	19.6	30	150	49	23.26	381.10
H7NG204DRE	460-3-60	199600	58483	18650	10.7	3.1	302500	15400	19.6	30	141	49	23.26	381.10
H7NG204FRD	200-220/3/50	161200	47232	15300	10.5	3.1	244600	13050	18.8	62	0	98	23.26	381.10
H7NG204FRD	208-230-3-60	197200	57780	19000	10.4	3.0	287000	16160	17.8	60	0	98	23.26	381.10
H7NG244DRE	380-415/3/50	195200	57194	18670	10.5	3.1	287000	15670	18.3	36.5	190	56	26.8	439.10
H7NG244DRE	460/3/60	234200	68621	22400	10.5	3.1	344500	18800	18.3	36.6	180	56	26.8	439.10
H7NG244FRD	200-220/3/50	195200	57194	18670	10.5	3.1	287000	15670	18.3	75	400	112	26.8	439.10
H7NG244FRD	208-230-3-60	234200	68621	22400	10.5	3.1	344500	18800	18.3	73.1	360	112	26.8	439.10
H7NG294DPE	380-415/3/50	222400	65163	23090	9.6	2.8	317300	20240	15.7	44	215	69	31.02	508.24
H7NG294DPE	460/3/60	266800	78172	27710	9.6	2.8	380800	24290	15.7	43.9	200	69	31.02	508.24
H7NG294DPF	575/3/60	266800	78172	27710	9.6	2.8	380800	24290	15.7	35.1	160	55	31.02	508.24
H7NG294FPD	200-220/3/50	220900	64724	23090	9.6	2.8	326500	19860	16.4	90.5	0	138	31.02	508.24
H7NG294FPD	208-230-3-60	266800	78172	27710	9.6	2.8	380800	24290	15.7	87.7	0	138	31.02	508.24

Data Subject to Revision

Model	Oil Charge OZ	Oil Charge L	Weight Net Lbs	Weight Net Kg	Weight Ship Lbs	Weight Ship Kg	ELECTRICAL START COMPONENTS Run Capacitor MFD/VOLTS	Start Capacitor MFD/VOLTS	G.E. Relay	DIMENSIONS A IN	A MM	B IN	B MM	C IN	C MM
H7NG184DPD	224	6.6	241.0	109.3	253.0	114.8	N/A	N/A	N/A	11.79	299.47	21.75	552.45	22.40	568.96
H7NG184DPD	224	6.6	241.0	109.3	253.0	114.8	N/A	N/A	N/A	11.79	299.47	21.75	552.45	22.40	568.96
H7NG184DPE	224	6.6	241.0	109.3	253.0	114.8	N/A	N/A	N/A	11.79	299.47	21.75	552.45	22.40	568.96
H7NG184DPE	224	6.6	241.0	109.3	253.0	114.8	N/A	N/A	N/A	11.79	299.47	21.75	552.45	22.40	568.96
H7NG204DRE	224	6.6	248.0	112.5	260.0	117.9	N/A	N/A	N/A	11.79	299.47	21.75	552.45	22.40	568.96
H7NG204DRE	224	6.6	248.0	112.5	260.0	117.9	N/A	N/A	N/A	11.79	299.47	21.75	552.45	22.40	568.96
H7NG204FRD	224	6.6	248.0	112.5	260.0	117.9	N/A	N/A	N/A	11.79	299.47	21.75	552.45	22.40	568.96
H7NG204FRD	224	6.6	248.0	112.5	260.0	117.9	N/A	N/A	N/A	11.79	299.47	21.75	552.45	22.40	568.96
H7NG244DRE	224	6.6	257.0	116.6	269.0	122.0	N/A	N/A	N/A	11.79	299.47	21.75	552.45	22.40	568.96
H7NG244DRE	224	6.6	257.0	116.6	269.0	122.0	N/A	N/A	N/A	11.79	299.47	21.75	552.45	22.40	568.96
H7NG244FRD	224	6.6	257.0	116.6	269.0	122.0	N/A	N/A	N/A	11.79	299.47	21.75	552.45	22.40	568.96
H7NG244FRD	224	6.6	257.0	116.6	269.0	122.0	N/A	N/A	N/A	11.79	299.47	21.75	552.45	22.40	568.96
H7NG294DPE	224	6.6	268.0	121.6	280.0	127.0	N/A	N/A	N/A	11.79	299.47	21.75	552.45	22.40	568.96
H7NG294DPE	224	6.6	268.0	121.6	280.0	127.0	N/A	N/A	N/A	11.79	299.47	21.75	552.45	22.40	568.96
H7NG294DPF	224	6.6	268.0	121.6	280.0	127.0	N/A	N/A	N/A	11.79	299.47	21.75	552.45	22.40	568.96
H7NG294FPD	224	6.6	268.0	121.6	280.0	127.0	N/A	N/A	N/A	11.79	299.47	21.75	552.45	22.40	568.96
H7NG294FPD	224	6.6	268.0	121.6	280.0	127.0	N/A	N/A	N/A	11.79	299.47	21.75	552.45	22.40	568.96

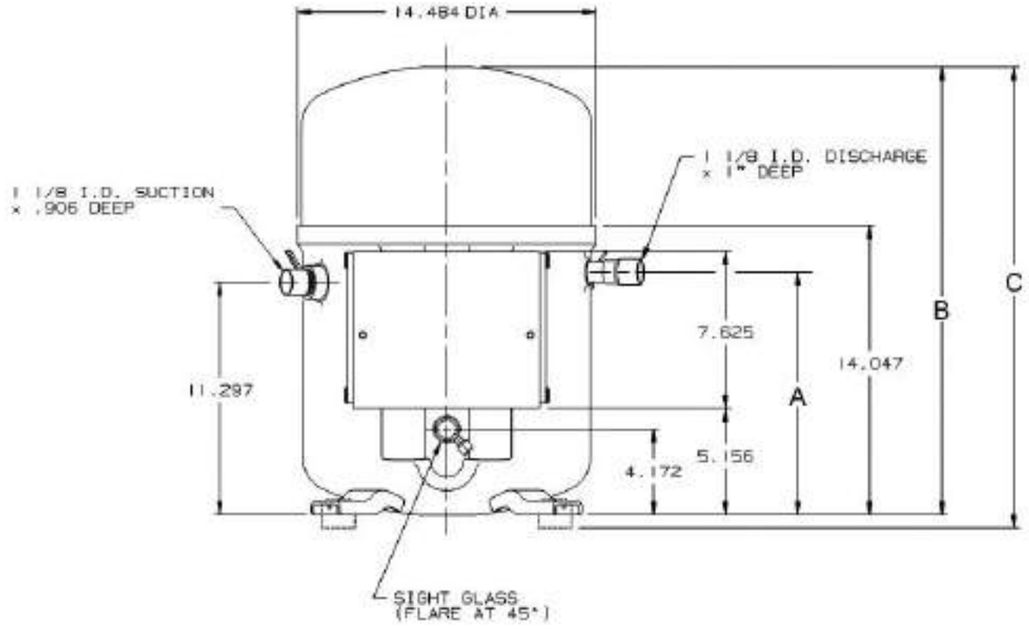

H7NG

H2DA *SERIES*

Model	Volts Phase Hz	@45/130 Capacity BTU/H	@45/130 Capacity WATTS	@45/130 Motor Input WATTS	@45/130 EER/COP BTU/WH	@45/130 EER/COP W/W	@45/100 Capacity BTU/H	@45/100 Motor Input WATTS	@45/100 EER BTU/WH	Electrical Data RLA	Electrical Data LRA	Electrical Data MCC	Displacement IN3/REV	Displacement CM3/REV
H2DA *SERIES* (R22)														
H2DA763DBE	380-415/3/50	62,800	18400	6090	10.3	3.0	81300	4940	16.5	10.4	78	19	4.021	69.89
H2DA763DBE	460/3/60	75,800	22209	7310	10.4	3.0	98200	5930	16.6	10.4	78	19	4.021	69.89
H2DA843DBE	460/3/60	84,400	24729	8260	10.2	3.0	107100	6960	15.4	11.6	78	19	4.505	73.82
H2DA843DBF	575/3/50	84,400	24729	8260	10.2	3.0	107100	6960	15.4	9.1	72	16	4.505	73.82
H2DA843DBL	200-230/3/60	84,400	24729	8260	10.2	3.0	107100	6960	15.4	23.5	156	40	4.505	73.92
H2DA923DBE	380-415/3/50	77,600	22736	7690	10.1	3.0	98600	6300	15.6	12.7	90	26	4.926	80.72
H2DA923DBE	460/3/60	92,700	27161	8920	10.4	3.0	117700	7340	16.0	12.6	90	26	4.926	80.72
H2DA923DBL	200-220/3/50	79,000	23147	7740	10.2	3.0	100400	6350	15.8	25.4	180	48	4.926	80.72
H2DA923DBL	200-230/3/60	92,700	27161	8920	10.4	3.0	117700	7340	16.0	25.2	180	48	4.926	80.72
H2DA104DBE	460/3/60	106,800	31292	10490	10.2	3.0	136800	8700	15.7	14.5	106	25	5.655	92.66
H2DA104DBF	575/3/50	106,800	31292	10490	10.2	3.0	136800	8700	15.7	11.6	86	18	5.655	92.66
H2DA104DBL	200-230/3/60	106,800	31292	10490	10.2	3.0	136800	8700	15.7	29	212	50	5.655	92.66
H2DA114DBE	380-415/3/50	95,000	27835	9120	10.4	3.0	121800	7540	16.2	14.9	124	28	5.818	95.33
H2DA114DBE	460/3/60	111,300	32611	10710	10.4	3.0	142600	8930	16.0	15.2	124	30	5.818	95.33
H2DA124DBE	380-415/3/50	103,600	30355	10060	10.3	3.0	133300	8330	16.0	16.5	124	32	6.308	103.36
H2DA124DBE	460/3/60	121,600	35629	11950	10.2	3.0	156400	9930	15.8	17	124	32	6.308	103.36
H2DA124DBL	200-220/3/50	104,600	30648	10260	10.2	3.0	134600	8490	15.8	36	248	64	6.308	103.36
H2DA124DBL	200-230/3/60	121,600	35629	11950	10.2	3.0	156.400	9930	15.8	34	248	64	6.308	103.36

Data Subject to Revision

Model	Oil Charge OZ	Oil Charge L	Weight Net Lbs	Weight Net Kg	Weight Ship Lbs	Weight Ship Kg	ELECTRICAL START COMPONENTS Run Capacitor MFD/VOLTS	ELECTRICAL START COMPONENTS Start Capacitor MFD/VOLTS	ELECTRICAL START COMPONENTS G.E. Relay	DIMENSIONS A IN	DIMENSIONS A MM	DIMENSIONS B IN	DIMENSIONS B MM	DIMENSIONS C IN	DIMENSIONS C MM
H2DA763DBE	100	3.0	157.0	71.2	172.0	78.0	N/A	N/A	N/A	16.28	413.51	16.72	424.68	17.19	487.42
H2DA763DBE	100	3.0	157.0	71.2	172.0	78.0	N/A	N/A	N/A	16.28	413.51	16.72	424.68	17.19	487.42
H2DA843DBE	110	3.3	157.0	71.2	172.0	78.0	N/A	N/A	N/A	16.28	413.51	16.72	424.68	18.19	462.02
H2DA843DBF	110	3.3	157.0	71.2	172.0	78.0	N/A	N/A	N/A	16.28	413.51	16.72	424.68	18.19	462.02
H2DA843DBL	110	3.3	157.0	71.2	172.0	78.0	N/A	N/A	N/A	16.28	413.51	16.72	424.68	18.19	462.02
H2DA923DBE	110	3.3	157.0	71.2	172.0	78.0	N/A	N/A	N/A	16.28	413.51	16.72	424.68	17.19	487.42
H2DA923DBE	110	3.3	157.0	71.2	172.0	78.0	N/A	N/A	N/A	16.28	413.51	16.72	424.68	17.19	487.42
H2DA923DBL	110	3.3	157.0	71.2	172.0	78.0	N/A	N/A	N/A	16.28	413.51	16.72	424.68	17.19	487.42
H2DA923DBL	110	3.3	157.0	71.2	172.0	78.0	N/A	N/A	N/A	16.28	413.51	16.72	424.68	17.19	487.42
H2DA104DBE	110	3.3	157.0	71.2	172.0	78.0	N/A	N/A	N/A	17.78	451.61	19.22	488.18	19.69	500.12
H2DA104DBF	110	3.3	157.0	71.2	172.0	78.0	N/A	N/A	N/A	17.78	451.61	19.22	488.18	19.69	500.12
H2DA104DBL	110	3.3	157.0	71.2	172.0	78.0	N/A	N/A	N/A	17.78	451.61	19.22	488.18	19.69	500.12
H2DA114DBE	110	3.3	175.0	79.4	184.0	83.5	N/A	N/A	N/A	17.78	451.61	19.22	488.18	19.69	500.12
H2DA114DBE	110	3.3	175.0	79.4	184.0	83.5	N/A	N/A	N/A	17.78	451.61	19.22	488.18	19.69	500.12
H2DA124DBE	110	3.3	175.0	79.4	184.0	83.5	N/A	N/A	N/A	17.78	451.61	18.22	488.18	18.69	474.72
H2DA124DBE	110	3.3	175.0	79.4	184.0	83.5	N/A	N/A	N/A	17.78	451.61	18.22	488.18	18.69	474.72
H2DA124DBL	110	3.3	175.0	79.4	184.0	83.5	N/A	N/A	N/A	17.78	451.61	18.22	488.18	18.69	474.72
H2DA124DBL	110	3.3	175.0	79.4	184.0	83.5	N/A	N/A	N/A	17.78	451.61	18.22	488.18	18.69	474.72

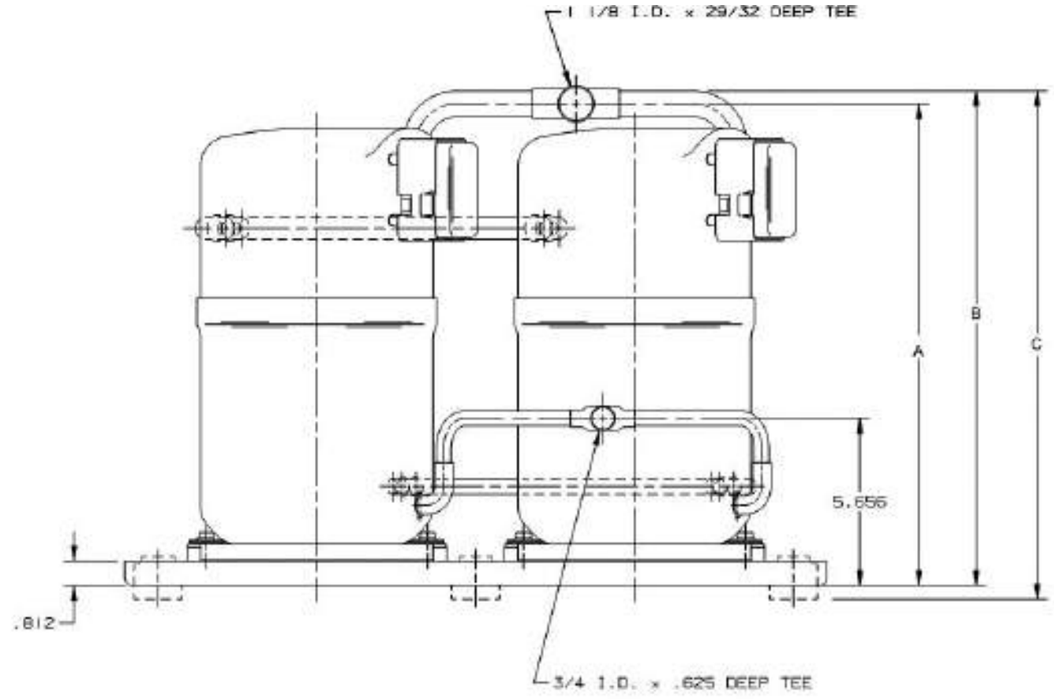

H2DA

H7DA *SERIES*

Model	Volts Phase Hz	@45/130 Capacity BTU/H	@45/130 Capacity WATTS	@45/130 Motor Input WATTS	@45/130 EER/COP BTU/WH	@45/130 EER/COP W/W	@45/100 Capacity BTU/H	@45/100 Motor Input WATTS	@45/100 EER BTU/WH	Electrical Data RLA	Electrical Data LRA	Electrical Data MCC	Displacement IN3/REV	Displacement CM3/REV
H7DA *SERIES* (R407C)														
H7DA114DBE	380-415/3/50	84800	24846	8240	10.3	3.0	115400	7100	16.2	14.9	124	28	5.818	95.32
H7DA114DBE	460/3/60	104800	30706	10370	10.1	3.0	142600	9000	15.9	15.2	124	30	5.818	95.32
H7DA114DBL	200-220/3/50	84800	24846	8400	10.1	3.0	115500	7230	16.0	31.8	248	60	5.818	95.32
H7DA114DBL	200-230/3/60	104800	30706	10370	10.1	3.0	142600	9000	15.9	30.6	248	60	5.818	95.32
H7DA124DBE	380-415/3/50	92400	27073	9090	10.2	3.0	126400	7850	16.1	16.5	124	32	6.308	103.35
H7DA124DBE	460/3/60	108500	31791	10890	10.0	2.9	148300	9400	15.8	17	124	32	6.308	103.35
H7DA763DBE	380-415/3/50	56100	16437	5510	10.2	3.0	77100	4660	16.5	10.4	78	19	4.147	67.95
H7DA763DBE	460/3/60	71100	20832	6860	10.4	3.0	97800	5810	16.8	10.4	78	19	4.147	67.95
H7DA923DBE	380-415/3/50	69300	20305	6950	10.0	2.9	93500	5940	15.7	12.7	90	26	4.926	80.71
H7DA923DBE	460/3/60	82200	24085	8070	10.2	3.0	111000	6890	16.1	12.6	90	26	4.926	80.71

Data Subject to Revision

Model	Oil Charge OZ	Oil Charge L	Weight Net Lbs	Weight Net Kg	Weight Ship Lbs	Weight Ship Kg	ELECTRICAL START COMPONENTS Run Capacitor MFD/VOLTS	Start Capacitor MFD/VOLTS	G.E. Relay	DIMENSIONS A IN	A MM	B IN	B MM	C IN	C MM
H7DA114DBE	110	3.3	175.0	79.4	184.0	83.5	N/A	N/A	N/A	17.78	451.61	19.22	488.19	19.69	500.13
H7DA114DBE	110	3.3	175.0	79.4	184.0	83.5	N/A	N/A	N/A	17.78	451.61	19.22	488.19	19.69	500.13
H7DA114DBL	110	3.3	175.0	79.4	184.0	83.5	N/A	N/A	N/A	17.78	451.61	19.22	488.19	19.69	500.13
H7DA114DBL	110	3.3	175.0	79.4	184.0	83.5	N/A	N/A	N/A	17.78	451.61	19.22	488.19	19.69	500.13
H7DA124DBE	110	3.3	175.0	79.4	184.0	83.5	N/A	N/A	N/A	17.78	451.61	19.22	488.19	19.69	500.13
H7DA124DBE	110	3.3	175.0	79.4	184.0	83.5	N/A	N/A	N/A	17.78	451.61	19.22	488.19	19.69	500.13
H7DA763DBE	100	3.0	157.0	71.2	172.0	78.0	N/A	N/A	N/A	16.29	413.77	17.72	450.09	18.19	462.03
H7DA763DBE	100	3.0	157.0	71.2	172.0	78.0	N/A	N/A	N/A	16.29	413.77	17.72	450.09	18.19	462.03
H7DA923DBE	110	3.3	157.0	71.2	172.0	78.0	N/A	N/A	N/A	16.29	413.77	17.72	450.09	18.19	462.03
H7DA923DBE	110	3.3	157.0	71.2	172.0	78.0	N/A	N/A	N/A	16.29	413.77	17.72	450.09	18.19	462.03

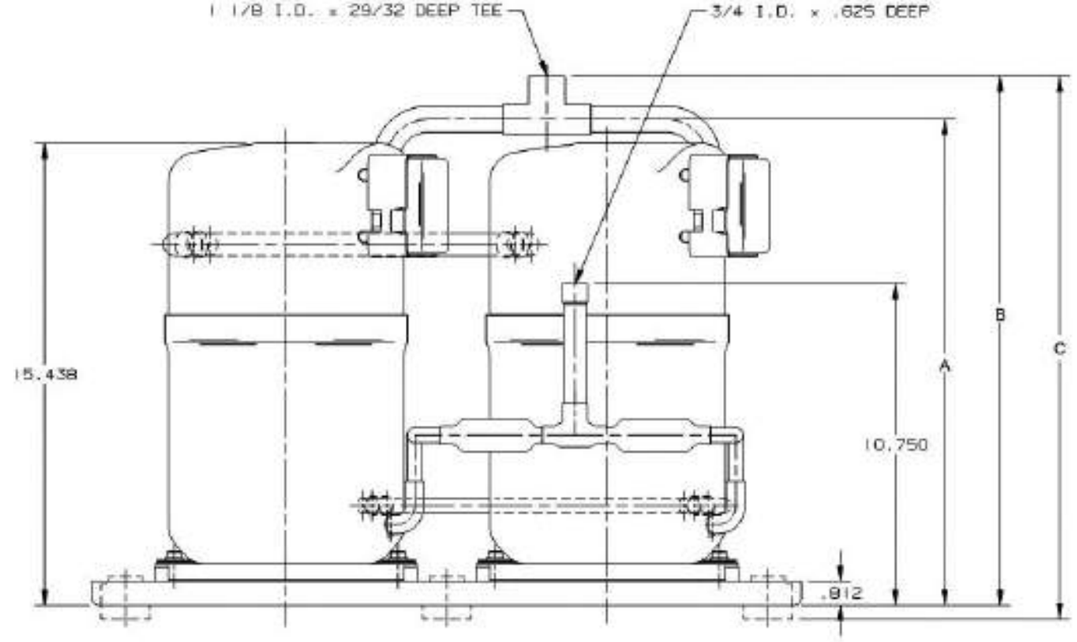

H7DA

REFRIGERATION

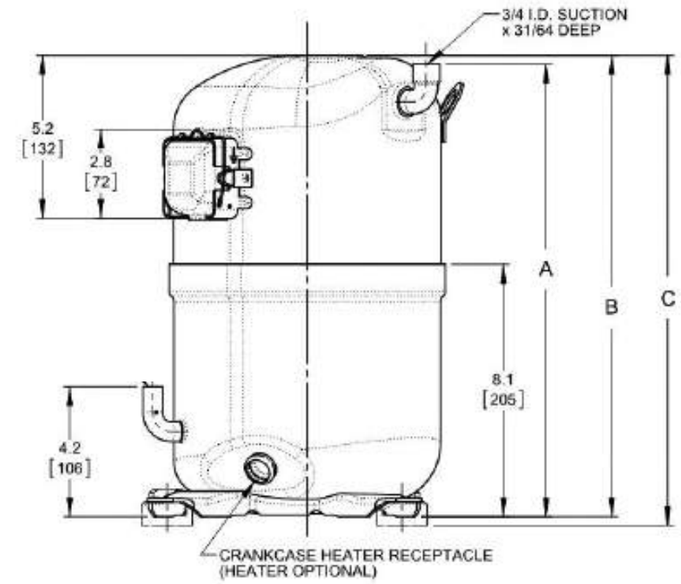

L61J

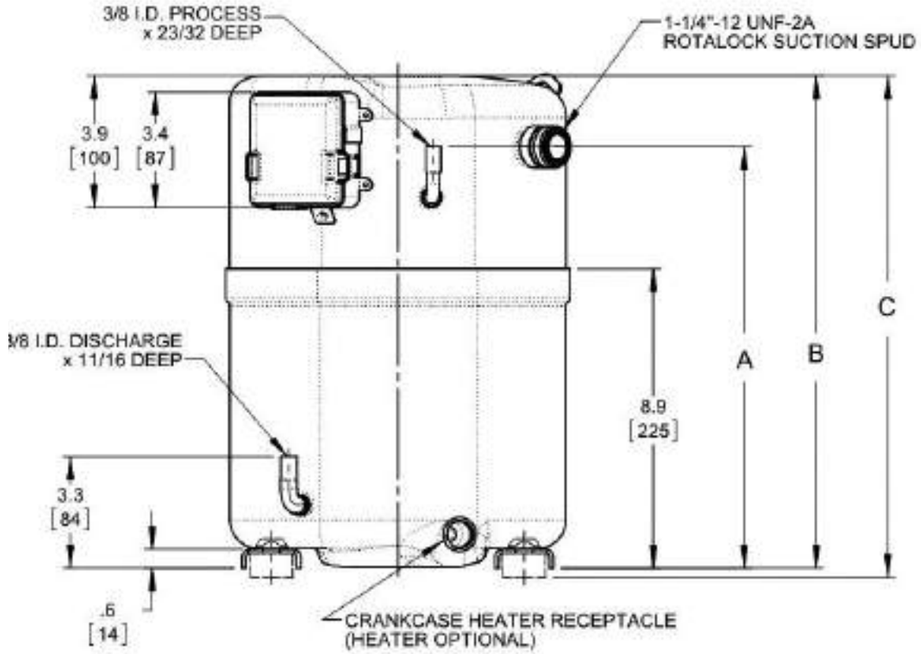

L63A

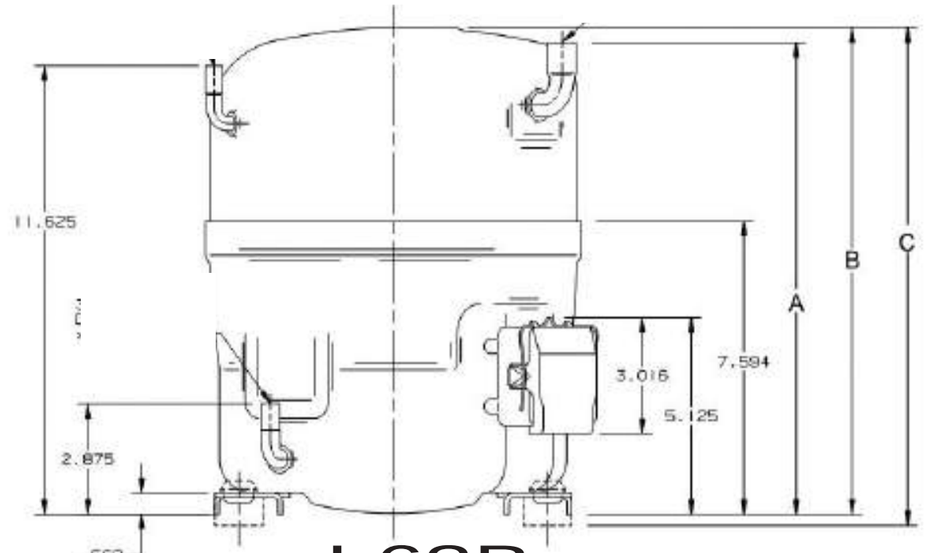

L63B

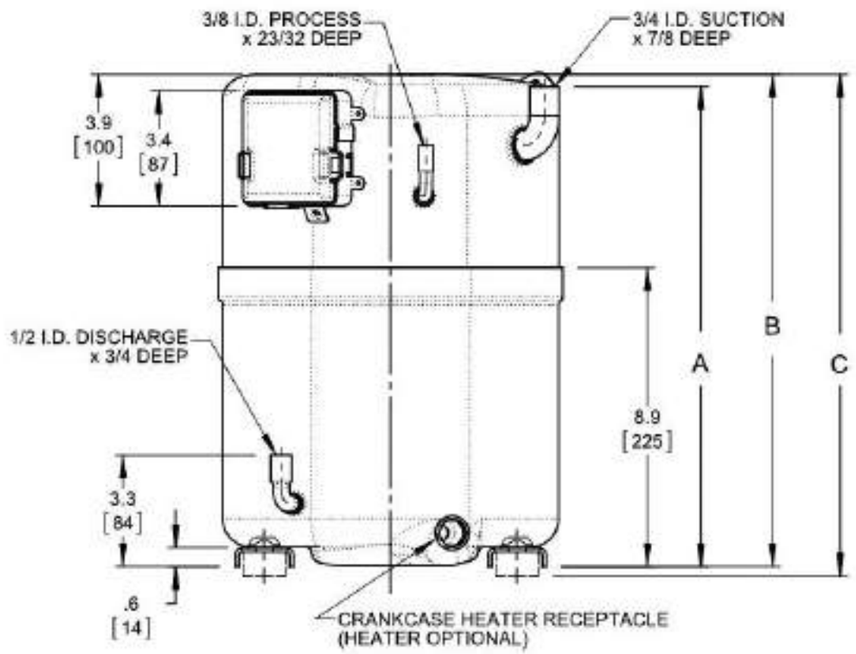

M63A

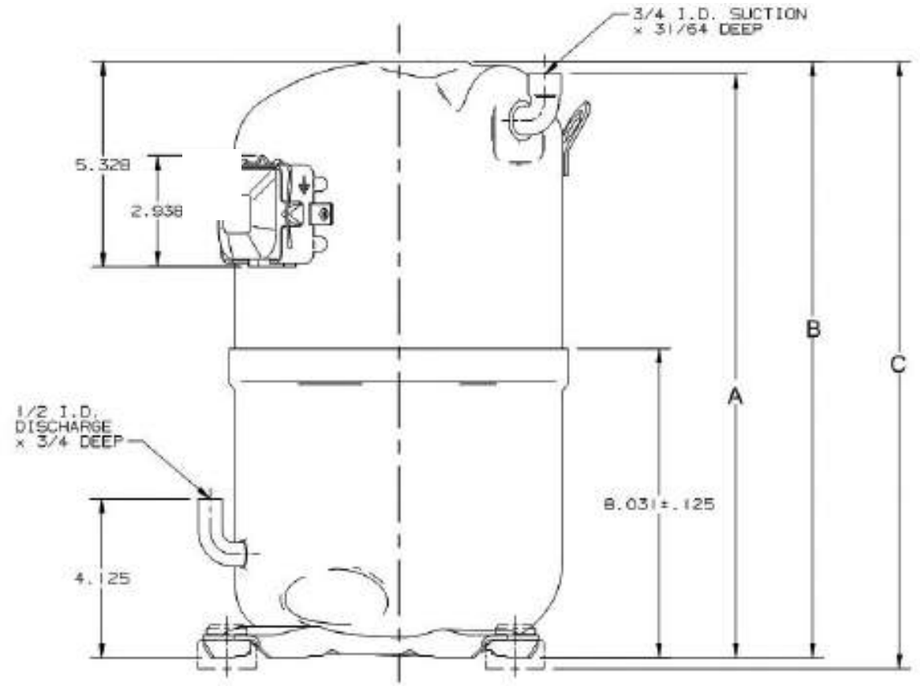

M63B

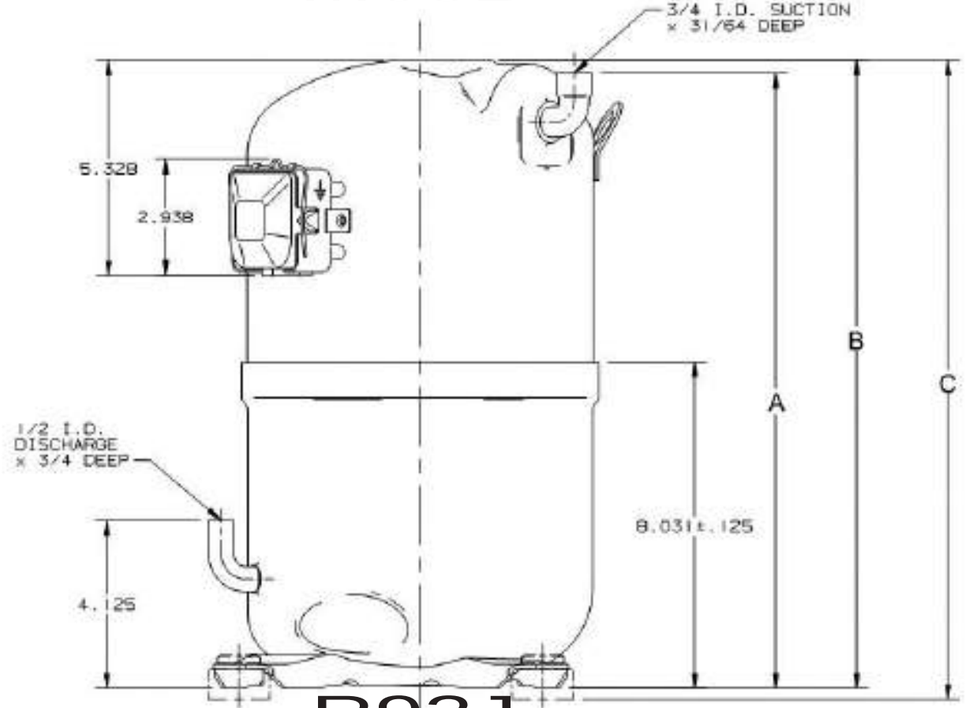

R92J

BENCHMARK L61J *SERIES (R404A Low Temp)*

Model	Volts Phase Hz	@-10/120 Capacity BTU/H	@-10/120 Capacity WATTS	@-10/120 Motor Input WATTS	@-10/120 EER/COP BTU/WH	@-10/120 EER/COP W/W	@-10/130 Capacity BTU/H	@-10/130 Motor Input WATTS	@-10/130 EER BTU/WH	Electrical Data RLA	Electrical Data LRA	Electrical Data MCC	Displacement IN3/REV	Displacement CM3/REV
L61J *SERIES (R404A)*														
L61J113ABC	208-230/1/60	7000	2051	1740	4.1	1.2	5500	1680	3.27	8.1	77	18.1	3.883	63.62
L61J113DBL	200-220/3/50	6400	1875	1630	3.9	1.1	4941	1572	3.14	8.5	71	12	3.883	63.62
L61J113DBL	200-230/3/60	7300	2139	1760	4.1	1.2	5753	1705	3.37	6.9	68	12	3.883	63.62
L63A *SERIES (R404A)*														
L63A113BBC	208-230/1/60	7700	2256	2020	3.8	1.1	10600	2000	5.3	11.6	65	21.5	3.933	64.44
L63A113BBK	220-240/1/50	6400	1875	1870	3.4	1.0	9200	1840	5.0	9	60	18	3.933	64.44
L63A113DBE	380-415/3/50	6200	1817	1590	3.6	1.1	8400	1520	5.5	3.3	30	80	3.933	64.44
L63A113DBE	460/3/60	7700	2256	1890	3.6	1.1	10800	1920	5.6	3.3	30	8	3.933	64.44
L63A113DBL	200-220/3/50	6200	1817	1590	3.6	1.1	8300	1520	5.9	6.1	50	14	3.933	64.44
L63A113DBL	200-230/3/60	7700	2256	1890	4.1	1.2	10800	1920	5.6	6.1	50	14	3.933	64.44
L63A183BBC	208-230/1/60	13300	3897	3040	4.1	1.2	18000	3050	5.9	15.6	110	32	6.032	98.83
L63A183BBK	220-240/1/50	11500	3370	2690	4.3	1.3	14400	2620	5.5	14	104	28	6.032	98.83
L63A183DBD	200-220/3/50	10900	3194	2570	4.1	1.2	14700	2570	5.7	9.8	87	18	6.032	98.83
L63A183DBD	208-230-3-60	13200	3868	3060	4.3	1.3	18000	3040	5.9	9.8	78	18	6.032	98.83
L63A183DBE	380-415/3/50	10900	3194	2570	4.1	1.2	14600	2450	6.0	5	39	9	6.032	98.83
L63A183DBE	460/3/60	13200	3868	3060	4.3	1.3	18000	3040	5.9	5	39	9	6.032	98.83
L63B *SERIES (R404A)*														
L63B562BBA	115-1-60	3300	967	1170	2.8	0.8	4800	1060	4.5	11.7	89	19.6	2.114	34.64
L63B562BBC	208-230/1/60	3500	1026	1140	5.0	1.5	5100	1110	4.6	5.5	57	12.8	2.114	34.64
L63B562BBK	220-240/1/50	2500	733	930	2.6	0.8	3900	870	4.5	5.3	43	9.6	2.114	34.64
L63B562DBL	200-220/3/50	2900	850	930	3.2	0.9	4400	930	4.7	3.8	34	8.2	2.114	34.64
L63B562DBL	200-230/3/60	3400	996	1080	3.1	0.9	5100	1100	4.6	3.8	34	8.2	2.114	34.64
L63B562DBV	380-415/3/50	2900	850	930	3.2	0.9	4200	870	4.8	1.8	18	3.8	2.114	34.64
L63B562DBV	380-460/3/60	3400	996	1080	3.1	0.9	5100	1060	4.8	1.8	18	3.8	2.114	34.64
L63B652BBC	208-230/1/60	4600	1348	1300	3.5	1.0	6200	1230	5.0	6.6	57	12.9	2.527	41.40
L63B652BBK	220-240/1/50	3700	1084	1250	3.0	0.9	2609	1154	2.26	6.9	49	12	2.527	41.40
L63B652DBL	200-220/3/50	3700	1084	1200	3.1	0.9	5200	1040	5.0	4.3	35	8.9	2.527	41.40
L63B652DBL	200-230/3/60	4400	1289	1410	3.1	0.9	6100	1180	5.2	4.3	34	8.9	2.527	41.40
L63B652DBV	380-415/3/50	3700	1084	1200	3.1	0.9	5400	1030	5.2	2	18	4	2.527	41.40
L63B652DBV	380-460/3/60	4400	1289	1410	3.1	0.9	5900	1160	5.1	2	18	4	2.527	41.40
L63B752BBC	208-230/1/60	5400	1582	1470	3.7	1.1	7500	1440	5.2	7.2	55	15.5	2.778	45.52
L63B752BBK	220-240/1/50	4200	1231	1200	3.5	1.0	5900	1160	5.1	7.5	49	15.4	2.778	45.52
L63B752DBL	200-220/3/50	4400	1289	1340	3.3	1.0	6100	1340	4.6	5.6	48	10	2.778	45.52
L63B752DBL	200-230/3/60	5500	1612	1530	3.6	1.1	7600	1500	5.0	5.9	48	10	2.778	45.52
L63B752DBV	380-415/3/50	4400	1289	1250	3.5	1.0	6000	1220	4.9	2.9	24	5.6	2.778	45.52
L63B752DBV	380-460/3/60	5500	1612	1530	3.6	1.1	7600	1500	5.1	2.9	24	5.6	2.778	45.52
L64A *SERIES (R404A)*														
L64A113BBC	208-230/1/60	7700	2256	2010	3.9	1.1	10800	2060	5.2	11.7	96	21	3.933	64.44
L64A113DBL	200-220/3/50	6300	1846	1590	3.9	1.1	5014	1534	3.27	7	70	15	3.933	64.44
L64A113DBL	200-230/3/60	8300	2432	1980	4.2	1.2	6702	1921	3.49	6.8	70	14.5	3.933	64.44

Data Subject to Revision

Model	Oil Charge OZ	Oil Charge L	Weight Net Lbs	Weight Net Kg	Weight Ship Lbs	Weight Ship Kg	ELECTRICAL START COMPONENTS Run Capacitor MFD/VOLTS	ELECTRICAL START COMPONENTS Start Capacitor MFD/VOLTS	ELECTRICAL START COMPONENTS G.E. Relay	DIMENSIONS A IN	DIMENSIONS A MM	DIMENSIONS B IN	DIMENSIONS B MM	DIMENSIONS C IN	DIMENSIONS C MM
L61J113ABC	40	1.1	76.0	34.5	80.0	36.3	40/370	238-262/330	3ARR*3S*	15.00	381.00	15.30	388.62	15.50	393.70
L61J113DBL	40	1.1	69.0	31.3	73.0	33.1	NA	NA	NA	14.50	368.30	14.70	373.38	15.00	381.00
L61J113DBL	40	1.1	69.0	31.3	73.0	33.1	NA	NA	NA	14.50	368.30	14.70	373.38	15.00	381.00
L63A113BBC	50	1.5	72.0	32.7	75.5	34.2	20/440	161-193/250	3ARR3*26C*	12.50	317.50	14.60	370.84	14.90	378.46
L63A113BBK	50	1.5	74.0	33.6	77.5	35.2	25/370	161-193/250	3ARR3*10AU*	12.50	317.50	14.60	370.84	14.90	378.46
L63A113DBE	50	1.5	71.0	32.2	74.5	33.8	N/A	N/A	N/A	12.50	317.50	14.60	370.84	14.90	378.46
L63A113DBE	50	1.5	71.0	32.2	74.5	33.8	N/A	N/A	N/A	12.50	317.50	14.60	370.84	14.90	378.46
L63A113DBL	50	1.5	71.0	32.2	74.5	33.8	N/A	N/A	N/A	12.50	317.50	14.60	370.84	14.90	378.46
L63A113DBL	50	1.5	71.0	32.2	74.5	33.8	N/A	N/A	N/A	12.50	317.50	14.60	370.84	14.90	378.46
L63A183BBC	50	1.5	74.0	33.6	77.5	35.2	35/440	216-259/330	216-259/330	12.50	317.50	14.60	370.84	14.90	378.46
L63A183BBK	50	1.5	74.0	33.6	77.5	35.2	35/440	270-324/330	3ARR3*4AA	15.80	401.32	16.10	408.94	16.40	416.56
L63A183DBD	50	1.5	74.0	33.6	77.5	35.2	N/A	N/A	N/A	12.50	317.50	14.60	370.84	14.90	378.46
L63A183DBD	50	1.5	74.0	33.6	77.5	35.2	N/A	N/A	N/A	12.50	317.50	14.60	370.84	14.90	378.46
L63A183DBE	50	1.5	74.0	33.6	77.5	35.2	N/A	N/A	N/A	12.50	317.50	14.60	370.84	14.90	378.46
L63A183DBE	50	1.5	74.0	33.6	77.5	35.2	N/A	N/A	N/A	12.50	317.50	14.60	370.84	14.90	378.46
L63B562BBA	40	1.1	61.0	27.7	64.5	29.3	20/370	161-193/250	3ARR3*25S*	12.20	309.88	12.60	320.04	12.90	327.66
L63B562BBC	40	1.1	61.0	27.7	64.5	29.3	30/370	161-193/250	3ARR3*3V*	12.70	322.58	13.20	335.28	13.50	342.90
L63B562BBK	40	1.1	61.0	27.7	64.5	29.3	15/370	161-193/250	3ARR3*3AV*	12.20	309.88	13.20	335.28	13.50	342.90
L63B562DBL	40	1.1	53.0	24.0	64.5	29.3	N/A	N/A	N/A	12.24	310.90	12.63	320.80	12.90	327.66
L63B562DBL	40	1.1	53.0	24.0	64.5	29.3	N/A	N/A	N/A	12.24	310.90	12.63	320.80	12.90	327.66
L63B562DBV	40	1.1	55.0	24.9	58.5	26.5	N/A	N/A	N/A	12.24	310.90	12.63	320.80	12.90	327.66
L63B562DBV	40	1.1	55.0	24.9	58.5	26.5	N/A	N/A	N/A	12.24	310.90	12.63	320.80	12.90	327.66
L63B652BBC	40	1.1	61.0	27.7	64.5	29.3	30/370	161-193/250	3ARR3*3V*	12.77	324.36	13.25	336.55	13.53	343.66
L63B652BBK	40	1.1	61.0	27.7	64.5	29.3	15/370	125-149/250	()	12.77	324.36	13.25	336.55	13.53	343.66
L63B652DBL	40	1.1	56.0	25.4	59.5	27.0	N/A	N/A	N/A	12.24	310.90	12.63	320.80	12.90	327.66
L63B652DBL	40	1.1	56.0	25.4	59.5	27.0	N/A	N/A	N/A	12.24	310.90	12.63	320.80	12.90	327.66
L63B652DBV	40	1.1	56.0	25.4	59.5	27.0	N/A	N/A	N/A	12.24	310.90	12.63	320.80	12.90	327.66
L63B652DBV	40	1.1	56.0	25.4	59.5	27.0	N/A	N/A	N/A	12.24	310.90	12.63	320.80	12.90	327.66
L63B752BBC	40	1.1	61.0	27.7	64.5	29.3	30/370	161-193/250	3ARR3*3V*	12.80	325.12	13.30	337.82	13.60	345.44
L63B752BBK	40	1.1	61.0	27.7	64.5	29.3	15/370	125-149/250	3ARR3*10AU*	12.77	324.36	13.25	336.55	13.53	343.66
L63B752DBL	40	1.1	56.0	25.4	59.5	27.0	N/A	N/A	N/A	12.24	310.90	12.63	320.80	12.90	327.66
L63B752DBL	40	1.1	56.0	25.4	59.5	27.0	N/A	N/A	N/A	12.24	310.90	12.63	320.80	12.90	327.66
L63B752DBV	40	1.1	56.0	25.4	59.5	27.0	N/A	N/A	N/A	12.24	310.90	12.63	320.80	12.90	327.66
L63B752DBV	40	1.1	56.0	25.4	59.5	27.0	N/A	N/A	N/A	12.24	310.90	12.63	320.80	12.90	327.66
L64A113BBC	50	1.5	74.0	33.6	79.5	36.1	25/440	189-227/330	3ARR3*4A*	14.30	363.22	14.60	370.84	14.90	378.46
L64A113DBL	50	1.5	72.0	32.7	75.5	34.2	N/A	N/A	N/A	14.30	363.22	14.60	370.84	14.90	378.46
L64A113DBL	50	1.5	72.0	32.7	75.5	34.2	N/A	N/A	N/A	14.30	363.22	14.60	370.84	14.90	378.46

M63A *SERIES*

Model	Volts Phase Hz	@20/120 Capacity BTU/H	@20/120 Capacity WATTS	@20/120 Motor Input WATTS	@20/120 EER/COP BTU/WH	@20/120 EER/COP W/W	@20/130 Capacity BTU/H	@20/130 Motor Input WATTS	@20/130 EER BTU/WH	Electrical Data RLA	Electrical Data LRA	Electrical Data MCC	Displacement IN3/REV	Displacement CM3/REV
M63A *SERIES* (R404A)														
M63A243BBC	208-230/1/60	20600	6036	3210	6.4	1.9	23700	3270	7.2	16.5	96	28	4.310	70.62
M63A243DBL	200-220/3/50	17200	5040	2630	6.6	1.9	20300	2730	7.4	9.7	78	18.6	4.310	70.62
M63A243DBL	200-230/3/60	20500	6007	3070	6.7	2.0	23800	3170	7.5	9.6	78	18.6	4.310	70.62
M63A243DBV	380-415/3/50	17200	5040	2630	6.6	1.9	20300	2730	7.4	4.7	39	9	4.310	70.62
M63A243DBV	380-460/3/60	20500	6007	3070	6.7	2.0	23800	3170	7.5	4.8	39	9	4.310	70.62
M63A273BBC	208-230/1/60	22300	6534	3470	6.4	1.9	25600	3610	7.1	17.2	96	32	4.712	77.20
M63A273DBD	200-220/3/50	18100	5303	2820	6.4	1.9	21100	2900	7.3	10.8	70	18	4.712	77.20
M63A273DBD	208-230-3-60	22400	6563	3360	6.7	2.0	25400	3480	7.3	10.8	70	18	4.712	77.20
M63A273DBE	380-415/3/50	18100	5303	2820	6.4	1.9	21100	2900	7.3	5.3	32	9	4.712	77.20
M63A273DBE	460/3/60	22400	6563	3360	6.7	2.0	25400	3480	7.3	5.2	30	9	4.712	77.20
M63A273DBF	500/3/50	18000	5274	2880	6.2	1.8	20500	2880	7.1	4	36	8	4.712	77.20
M63A273DBF	575/3/60	21600	6329	3470	6.2	1.8	26000	3650	7.1	4.1	36	8	4.712	77.20
M63A323BBC	208-230/1/60	25500	7472	3870	6.6	1.9	30400	4200	7.2	19.7	138	40	5.202	85.23
M63A323DBL	200-220/3/50	22400	6563	3440	6.5	1.9	25000	3370	7.4	12.5	106	22.5	5.202	85.23
M63A323DBL	200-230/3/60	25700	7530	3880	6.6	1.9	30300	4140	7.3	12.3	106	24	5.202	85.23
M63A323DBV	380-415/3/50	22100	6475	3400	6.5	1.9	25400	3530	7.2	6.1	53	11	5.202	85.23
M63A323DBV	380-460/3/60	25700	7530	3910	6.6	1.9	30300	4140	7.3	6.1	53	11	5.202	85.23
M63B *SERIES* (R404A)														
M63B123BBC	208-230/1/60	10300	3018	1670	6.2	1.8	11800	1680	7.0	8.6	66	16	2.539	41.60
M63B123BBK	220-240/1/50	7800	2285	1460	5.3	1.6	9500	1390	6.8	7.4	61	13.7	2.539	41.60
M63B123DBL	200-220/3/50	8900	2608	1540	5.8	1.7	9600	1480	6.5	5.9	48	9.9	2.539	41.60
M63B123DBL	200-230/3/60	10300	3018	1720	6.0	1.8	11500	1660	6.9	5.9	48	9.9	2.539	41.60
M63B153BBC	208-230/1/60	12500	3663	2000	6.3	1.8	14400	1980	7.3	10	66	17	2.905	47.60
M63B153BBK	220-240/1/50	10200	2989	1780	5.7	1.7	12300	1750	7.0	8.7	61	16.2	2.905	47.60
M63B153DBL	200-220/3/50	10500	3077	1690	6.2	1.8	11800	1640	7.2	5.8	44	11	2.905	47.60
M63B153DBL	200-230/3/60	12300	3604	1970	6.2	1.8	14100	1960	7.2	6	44	11	2.905	47.60
M63B153DBV	380-415/3/50	10500	3077	1690	6.2	1.8	11800	1640	7.2	3	23	6	2.905	47.60
M63B153DBV	380-460/3/60	12300	3604	1970	6.2	1.8	14100	1960	7.2	3	23	6	2.905	47.60
M63B203BBC	208-230/1/60	16100	4717	2530	6.3	1.8	18900	2660	7.1	13.1	85	24	3.361	55.07
M63B203BBK	220-240/1/50	13600	3985	2160	6.3	1.8	16000	2250	7.1	11.4	76	21.4	3.361	55.07
M63B203DBD	200-220/3/50	13300	3897	2050	6.5	1.9	14700	2140	6.9	8.1	60	13.2	3.361	55.07
M63B203DBD	208-230-3-60	15800	4629	2480	6.4	1.9	18500	2580	7.2	8.1	60	13.2	3.361	55.07
M63B203DBE	380-415/3/50	13300	3897	2050	6.5	1.9	14700	2140	6.9	3.7	23	6.6	3.361	55.07
M63B203DBE	460/3/60	15800	4629	2480	6.4	1.9	18500	2580	7.2	3.7	23	3.6	3.361	55.07
M63B872BBC	208-230/1/60	6600	1934	1170	5.6	1.6	7900	1170	6.8	6.1	54	10.6	1.760	28.84
M63B872BBK	220-240/1/50	5200	1524	1040	5.0	1.5	6600	1090	6.1	5	35	9.1	1.760	28.84
M63B982BBC	208-230/1/60	7800	2285	1330	5.9	1.7	9200	1340	6.9	6.9	54	14	1.909	31.28
M63B982BBK	220-240/1/50	6100	1787	1150	5.3	1.6	7400	1160	6.5	5.4	42	10.8	1.909	31.28

Data Subject to Revision

Model	Oil Charge OZ	Oil Charge L	Weight Net Lbs	Weight Net Kg	Weight Ship Lbs	Weight Ship Kg	ELECTRICAL START COMPONENTS Run Capacitor MFD/VOLTS	ELECTRICAL START COMPONENTS Start Capacitor MFD/VOLTS	ELECTRICAL START COMPONENTS G.E. Relay	DIMENSIONS A IN	DIMENSIONS A MM	DIMENSIONS B IN	DIMENSIONS B MM	DIMENSIONS C IN	DIMENSIONS C MM
M63A243BBC	50	1.5	74.0	33.6	85.0	38.6	35/440	189-227/330	3ARR3*4A*	14.25	361.95	14.63	371.60	14.90	378.46
M63A243DBL	50	1.5	74.0	33.6	78.5	35.6	N/A	N/A	N/A	14.25	361.95	14.63	371.60	14.90	378.46
M63A243DBL	50	1.5	74.0	33.6	78.5	35.6	N/A	N/A	N/A	14.25	361.95	14.63	371.60	14.90	378.46
M63A243DBV	50	1.5	74.0	33.6	78.5	35.6	N/A	N/A	N/A	14.19	360.43	14.63	371.60	14.90	378.46
M63A243DBV	50	1.5	74.0	33.6	78.5	35.6	N/A	N/A	N/A	14.19	360.43	14.63	371.60	14.90	378.46
M63A273BBC	50	1.5	74.0	33.6	85.0	38.6	35/440	189-227/330	3ARR3*4A*	14.25	361.95	14.63	371.60	14.90	378.46
M63A273DBD	50	1.5	73.0	33.1	84.0	38.1	N/A	N/A	N/A	14.25	361.95	14.63	371.60	14.90	378.46
M63A273DBD	50	1.5	73.0	33.1	84.0	38.1	N/A	N/A	N/A	14.25	361.95	14.63	371.60	14.90	378.46
M63A273DBE	50	1.5	72.0	32.7	83.0	37.6	N/A	N/A	N/A	14.30	363.22	14.60	370.84	14.90	378.46
M63A273DBE	50	1.5	72.0	32.7	83.0	37.6	N/A	N/A	N/A	14.30	363.22	14.60	370.84	14.90	378.46
M63A273DBF	50	1.5	74.0	33.6	78.5	35.6	N/A	N/A	N/A	14.19	360.43	14.63	371.60	14.90	378.46
M63A273DBF	50	1.5	74.0	33.6	78.5	35.6	N/A	N/A	N/A	14.19	360.43	14.63	371.60	14.90	378.46
M63A323BBC	50	1.5	87.5	39.7	92.0	41.7	45/440	135-155/330	3ARR3*4A*	15.69	398.53	16.13	409.70	16.40	416.56
M63A323DBL	50	1.5	79.5	36.1	84.0	38.1	N/A	N/A	N/A	15.69	398.53	16.13	409.70	16.40	416.56
M63A323DBL	50	1.5	79.5	36.1	84.0	38.1	N/A	N/A	N/A	15.69	398.53	16.13	409.70	16.40	416.56
M63A323DBV	50	1.5	79.5	36.1	84.0	38.1	N/A	N/A	N/A	15.69	398.53	16.13	409.70	16.40	416.56
M63A323DBV	50	1.5	79.5	36.1	84.0	38.1	N/A	N/A	N/A	15.69	398.53	16.13	409.70	16.40	416.56
M63B123BBC	40	1.1	63.0	28.6	66.0	29.9	25/440	161-193/250	3ARR3*24T*	12.76	324.10	13.25	336.55	13.53	343.66
M63B123BBK	40	1.1	63.0	28.6	66.0	29.9	25/370	125-145/250	3ARR3*6AV*	12.76	324.10	13.25	336.55	13.53	343.66
M63B123DBL	40	1.1	56.0	25.4	59.5	27.0	N/A	N/A	N/A	12.24	310.90	12.63	320.80	12.90	327.66
M63B123DBL	40	1.1	56.0	25.4	59.5	27.0	N/A	N/A	N/A	12.24	310.90	12.63	320.80	12.90	327.66
M63B153BBC	40	1.1	62.0	28.1	65.5	29.7	35/440	161-193/25	3ARR3*24T*	12.76	324.10	13.25	336.55	13.53	343.66
M63B153BBK	40	1.1	63.0	28.6	66.0	29.9	30/370	161-193/250	3ARR3*6AV*	12.76	324.10	13.25	336.55	13.53	343.66
M63B153DBL	40	1.1	60.3	27.4	63.8	28.9	N/A	N/A	N/A	12.76	324.10	13.25	336.55	13.53	343.66
M63B153DBL	40	1.1	60.3	27.4	63.8	28.9	N/A	N/A	N/A	12.76	324.10	13.25	336.55	13.53	343.66
M63B153DBV	40	1.1	60.3	27.4	63.8	28.9	N/A	N/A	N/A	12.76	324.10	13.25	336.55	13.53	343.66
M63B153DBV	40	1.1	60.3	27.4	63.8	28.9	N/A	N/A	N/A	12.76	324.10	13.25	336.55	13.53	343.66
M63B203BBC	40	1.1	61.0	27.7	64.5	29.3	40/440	145-175/250	3ARR3*24T*	12.76	324.10	13.25	336.55	13.53	343.66
M63B203BBK	40	1.1	61.0	27.7	64.5	29.3	35/370	189-227/250	3ARR3*10AU*	13.76	349.50	14.25	361.95	14.53	369.06
M63B203DBD	40	1.1	63.0	28.6	66.5	30.2	N/A	N/A	N/A	12.76	324.10	13.25	336.55	13.53	343.66
M63B203DBD	40	1.1	63.0	28.6	66.5	30.2	N/A	N/A	N/A	12.76	324.10	13.25	336.55	13.53	343.66
M63B203DBE	40	1.1	63.0	28.6	66.5	30.2	N/A	N/A	N/A	12.76	324.10	13.25	336.55	13.53	343.66
M63B203DBE	40	1.1	63.0	28.6	66.5	30.2	N/A	N/A	N/A	12.76	324.10	13.25	336.55	13.53	343.66
M63B872BBC	40	1.1	60.3	27.4	63.8	28.9	25/370	145-175/250	3ARR3*3U*	12.24	310.90	12.63	320.80	12.90	327.66
M63B872BBK	40	1.1	60.3	27.4	63.8	28.9	25/370	145-175/25	3ARR3*10AB*	12.24	310.90	12.63	320.80	12.90	327.66
M63B982BBC	40	1.1	60.3	27.4	63.8	28.9	25/370	145-175/250	3ARR3*3U*	12.24	310.90	12.63	320.80	12.90	327.66
M63B982BBK	40	1.1	60.3	27.4	63.8	28.9	25/370	145-175/250	3ARR3*10AT*	12.24	310.90	12.63	320.80	12.90	327.66

R92J *SERIES*

Model	Volts Phase Hz	@20/120 Capacity BTU/H	@20/120 Capacity WATTS	@20/120 Motor Input WATTS	@20/120 EER/COP BTU/WH	@20/120 EER/COP W/W	@35 Capacity BTU/H	@35 Motor Input WATTS	@35 EER BTU/WH	Electrical Data RLA	Electrical Data LRA	Electrical Data MCC	Displacement IN3/REV	Displacement CM3/REV
R92J *SERIES* (R404A)														
R92J163ABC	208-230/1/60	6850	2007	1161	5.9	1.7	N/A	N/A	N/A	5.2	43	11	1.975	32.36
R92J183ABC	208-230/1/60	8327	2440	1336	6.23	1.8	N/A	N/A	N/A	6	43	13	2.144	35.13
R92J183ABK	220-240/1/50	6731	1980	1158	5.8	1.7	N/A	N/A	N/A	5.2	37	9	2.144	35.13
R92J183DBL	200-220/3/50	6943	2034	1190	5.8	1.7	N/A	N/A	N/A	6.1	64	10.6	2.144	35.13
R92J183DBL	200-230/3/60	8383	2456	1381	6.1	1.8	N/A	N/A	N/A	5.4	63	11.2	2.144	35.13
R92J203ABC	208-230/1/60	9400	2754	1525	6.2	1.8	N/A	N/A	N/A	6.9	61	15	2.224	36.44
R92J203DBL	200-230/3/60	9400	2754	1520	6.2	1.8	N/A	N/A	N/A	5.6	63	11.4	2.224	36.44
R92J203DBL	200-220/3/50	7600	2226	1300	5.9	1.7	N/A	N/A	N/A	6.6	64	11	2.224	36.44
R92J203ABK	220-240/1/50	7400	2168	1250	5.9	1.7	N/A	N/A	N/A	6.1	48	11.6	2.224	36.44
R92J223ABC	208-230/1/60	10780	3158	1678	6.4	1.9	N/A	N/A	N/A	8.6	61	15	2.539	41.60
R92J223ABK	220-240/1/50	8800	2578	2578	6.2	1.8	N/A	N/A	N/A	6.7	48	13	2.539	41.60
R92J223DBL	200-220/3/50	8397	2431	1341	6.2	1.8	N/A	N/A	N/A	6.5	60	12	2.539	41.60
R92J223DBL	200-230/3/60	10479	3070	1685	6.2	1.8	N/A	N/A	N/A	6.5	60	12	2.539	41.60
R92J223DBV	380-415/3/50	8312	2435	1349	6.2	1.8	N/A	N/A	N/A	3	30	6	2.539	41.60
R92J223DBV	380-460/3/60	10631	3114	1716	6.2	1.8	N/A	N/A	N/A	2	30	6	2.539	41.60
R92J243ABC	208-230/1/60	12300	3603	1910	6.4	1.9	N/A	N/A	N/A	8.4	60	16.5	2.708	44.37
R92J243BBK	220-240-1-50	10050	2944	1570	6.4	1.9	N/A	N/A	N/A	9.6	58	18	2.708	44.37
R92J243DBL	200-230/3/60	12400	3633	1940	6.4	1.9	N/A	N/A	N/A	6.4	63	12.7	2.708	44.37
R92J243DBL	200-220/3/50	10300	3017	1640	6.3	1.8	N/A	N/A	N/A	6.8	63	12.8	2.708	44.37
R92J243DBV	380-460/3/60	12400	3633	1925	6.4	1.9	N/A	N/A	N/A	3.1	30	6.1	2.708	44.37
R92J243DBV	380-415/3/50	10200	2988	1560	6.5	1.9	N/A	N/A	N/A	3.1	30	5.9	2.708	44.37
R92J253ABC	208-230/1/60	11811	3461	1849	6.4	1.9	N/A	N/A	N/A	8.7	61	17	2.765	45.30
R92J253ABK	220-240/1/50	10200	2985	1540	6.6	1.9	N/A	N/A	N/A	7.6	64	16	2.765	45.30
R92J253DBL	200-220/3/50	9890	2898	1583	6.2	1.8	N/A	N/A	N/A	6.6	64	13	2.765	45.30
R92J253DBL	200-230/3/60	11850	3472	1854	6.4	1.9	N/A	N/A	N/A	6.2	63	13.5	2.765	45.30
R92J253DBV	380-415/3/50	9890	2898	1583	6.3	1.8	N/A	N/A	N/A	3.1	30	6.1	2.765	45.30
R92J253DBV	380-460/3/60	11850	3472	1854	6.4	1.9	N/A	N/A	N/A	3.1	30	6.1	2.765	45.30
R92J273ABC	208-230/1/60	12860	3767	1914	6.7	2.0	N/A	N/A	N/A	9	61	18.3	2.915	47.76
R92J273ABK	220-240/1/50	11172	3273	1689	6.6	1.9	N/A	N/A	N/A	6.8	64	14	2.915	47.76
R92J273DBL	200-230/3/60	12735	3736	1933	6.6	1.9	N/A	N/A	N/A	7	63	12.5	2.915	47.76
R92J273DBV	380-415/3/50	11154	3268	1721	6.5	1.9	N/A	N/A	N/A	3.2	30	6.5	2.915	47.76
R92J273DBV	380-460/3/60	13088	3834	2011	6.5	1.9	N/A	N/A	N/A	3.5	30	7	2.915	47.76
R92J323ABC	208-230/1/60	15800	4629	1543	6.7	2.0	N/A	N/A	N/A	10.7	82	20.2	3.281	53.76
R92J323DBL	200-220/3/50	14200	4160	2110	6.7	2.0	N/A	N/A	N/A	8	78	15.9	3.281	53.76
R92J323DBL	200-230/3/60	15800	4629	1543	6.7	2.0	N/A	N/A	N/A	8	78	15.9	3.281	53.76
R92J343ABC	208-230/1/60	17446	5111	2514	7.0	2.1	N/A	N/A	N/A	11.2	78	22	3.531	57.85
R92J343ABK	220-240-/1/50	14400	4219	2080	6.9	2.0	N/A	N/A	N/A	10	65	18	3.531	57.85
R92J343DBL	200-220/3/50	14144	4144	2075	6.8	2.0	N/A	N/A	N/A	8	76	14	3.531	57.85
R92J343DBL	200-230/3/60	17000	4981	2502	6.8	2.0	N/A	N/A	N/A	8	72	14.5	3.531	57.85
R92J343DBV	380-415/3/50	14370	4210	2185	6.6	1.9	N/A	N/A	N/A	4.5	45	8	3.531	57.85
R92J343DBV	380-460/3/60	17930	5253	2607	6.9	2.0	N/A	N/A	N/A	4.5	45	8	3.531	57.85
R92J383ABC	208-230/1/60	18707	5481	2882	6.5	1.9	N/A	N/A	N/A	13	86	25.5	3.883	63.62

Data Subject to Revision

R404A used in Medium Temp Applications

Model	Oil Charge OZ	Oil Charge L	Weight Net Lbs	Weight Net Kg	Weight Ship Lbs	Weight Ship Kg	ELECTRICAL START COMPONENTS Run Capacitor MFD/VOLTS	Start Capacitor MFD/VOLTS	G.E. Relay	DIMENSIONS A IN	A MM	B IN	B MM	C IN	C MM
R92J163ABC	35	1.0	58.5	26.5	62.0	28.1	35/370	145-175-330	3T	11.70	297.18	13.70	347.98	14.00	355.60
R92J183ABC	35	1.0	58.5	26.5	62.0	28.1	35/370	145-175/330	3AAR3*3T*	11.70	297.18	13.70	347.98	14.00	355.60
R92J183ABK	35	1.0	59.0	26.8	61.0	27.7	35/370	145-175/330	24AV	11.70	297.18	13.70	347.98	14.00	355.60
R92J183DBL	35	1.0	62.5	28.3	66.0	29.9	N/A	N/A	N/A	11.70	297.18	13.70	347.98	14.00	355.60
R92J183DBL	35	1.0	62.5	28.3	66.0	29.9	N/A	N/A	N/A	11.70	297.18	13.70	347.98	14.00	355.60
R92J203ABC	35	1.0	59.0	26.8	64.0	29.0	30/370	145-175-330	3N	13.50	342.90	13.70	347.98	14.00	355.60
R92J203DBL	35	1.0	59.0	26.8	64.0	29.0	N/A	N/A	N/A	13.50	342.90	13.70	347.98	14.00	355.60
R92J203DBL	35	1.0	59.0	26.8	64.0	29.0	N/A	N/A	N/A	13.50	342.90	13.70	347.98	14.00	355.60
R92J203ABK	35	1.0	63.0	28.6	67.0	30.4	35/370	145-175/250	3AP	13.50	342.90	13.70	347.98	14.00	355.60
R92J223ABC	35	1.0	59.0	26.8	63.5	28.8	30/370	145-175/330	3ARR*3N*	13.50	342.90	13.70	347.98	14.00	355.60
R92J223ABK	35	1.0	61.0	27.7	64.0	29.0	35/370	145-175/250	3ARR*3AP*	13.50	342.90	13.70	347.98	14.00	355.60
R92J223DBL	35	1.0	59.0	26.8	63.0	28.6	N/A	N/A	N/A	13.50	342.90	13.70	347.98	14.00	355.60
R92J223DBL	35	1.0	59.0	26.8	63.0	28.6	N/A	N/A	N/A	13.50	342.90	13.70	347.98	14.00	355.60
R92J223DBV	35	1.0	71.0	32.2	74.0	33.6	N/A	N/A	N/A	13.50	342.90	13.70	347.98	14.00	355.60
R92J223DBV	35	1.0	71.0	32.2	74.0	33.6	N/A	N/A	N/A	13.50	342.90	13.70	347.98	14.00	355.60
R92J243ABC	35	1.0	59.0	26.8	64.0	29.0	35/370	145-173-370	3N	13.50	342.90	13.70	347.98	14.00	355.60
R92J243BBK	35	1.0	63.0	28.6	67.0	30.4	30/440	145-175-250	3AP	13.50	342.90	13.70	347.98	14.00	355.60
R92J243DBL	35	1.0	62.0	28.1	64.0	29.0	N/A	N/A	N/A	13.50	342.90	13.70	347.98	14.00	355.60
R92J243DBL	35	1.0	62.0	28.1	64.0	29.0	N/A	N/A	N/A	13.50	342.90	13.70	347.98	14.00	355.60
R92J243DBV	35	1.0	62.0	28.1	64.0	29.0	N/A	N/A	N/A	13.50	342.90	13.70	347.98	14.00	355.60
R92J243DBV	35	1.0	62.0	28.1	64.0	29.0	N/A	N/A	N/A	13.50	342.90	13.70	347.98	14.00	355.60
R92J253ABC	45	1.2	77.0	34.9	80.0	36.3	30/370	145-175/250	3ARR3-3S	14.95	379.73	15.25	387.35	15.53	394.46
R92J253ABK	45	1.2	73.0	33.1	76.0	34.5	45/370	161-193/250	3ARR3*3AM*	15.20	386.08	15.50	393.70	15.78	400.81
R92J253DBL	45	1.2	71.0	32.2	75.0	34.0	N/A	N/A	N/A	14.40	365.76	14.70	373.38	15.00	381.00
R92J253DBL	45	1.2	71.0	32.2	75.0	34.0	N/A	N/A	N/A	14.40	365.76	14.70	373.38	15.00	381.00
R92J253DBV	45	1.2	71.0	32.2	75.0	34.0	N/A	N/A	N/A	14.95	379.73	15.25	387.35	15.53	394.46
R92J253DBV	45	1.2	71.0	32.2	75.0	34.0	N/A	N/A	N/A	14.95	379.73	15.25	387.35	15.53	394.46
R92J273ABC	45	1.2	72.0	32.7	75.0	34.0	30/370	145-175/330	3ARR3*3S*	14.92	378.97	15.25	387.35	15.53	394.46
R92J273ABK	45	1.2	72.0	32.7	75.0	34.0	45/370	161-193/250	3ARR3*3AM*	14.92	378.97	15.25	387.35	15.53	394.46
R92J273DBL	45	1.2	72.0	32.7	75.0	34.0	N/A	N/A	N/A	14.92	378.97	15.25	387.35	15.53	394.46
R92J273DBV	45	1.2	72.0	32.7	75.0	34.0	N/A	N/A	N/A	14.92	378.97	15.25	387.35	15.53	394.46
R92J273DBV	45	1.2	72.0	32.7	75.0	34.0	N/A	N/A	N/A	14.92	378.97	15.25	387.35	15.53	394.46
R92J323ABC	35	1.0	72.0	32.7	75.0	34.0	40/370	145-175/250	3ARR3*3P*	14.00	355.60	14.20	360.68	14.50	368.30
R92J323DBL	35	1.0	72.0	32.7	75.0	34.0	N/A	N/A	N/A	14.00	355.60	14.20	360.68	14.50	368.30
R92J323DBL	35	1.0	72.0	32.7	75.0	34.0	N/A	N/A	N/A	14.00	355.60	14.20	360.68	14.50	368.30
R92J343ABC	45	1.2	76.0	34.5	79.0	35.8	45/370	189-227/250	3ARR*3S	15.17	385.32	15.50	393.70	15.78	400.81
R92J343ABK	45	1.2	77.0	34.9	80.0	36.3	50/370	161-193/250	24AV	15.50	393.70	15.80	401.32	16.00	406.40
R92J343DBL	45	1.2	71.0	32.2	74.0	33.6	N/A	N/A	N/A	15.17	385.32	15.50	393.70	15.78	400.81
R92J343DBL	45	1.2	71.0	32.2	74.0	33.6	N/A	N/A	N/A	15.17	385.32	15.50	393.70	15.78	400.81
R92J343DBV	45	1.2	71.5	32.4	74.5	33.8	N/A	N/A	N/A	15.20	386.08	15.50	393.70	15.80	401.32
R92J343DBV	45	1.2	71.5	32.4	74.5	33.8	N/A	N/A	N/A	15.20	386.08	15.50	393.70	15.80	401.32
R92J383ABC	45	1.2	77.0	34.9	80.0	36.3	45/370	189-227/250	3ARR*3S*	15.50	393.70	15.80	401.32	16.00	406.40

R92J *SERIES*

Model	Volts Phase Hz	@20/120 Capacity BTU/H	Capacity WATTS	Motor Input WATTS	EER/COP BTU/WH	EER/COP W/W	Capacity BTU/H	Motor Input WATTS	EER BTU/WH	Electrical Data RLA	LRA	MCC	Displacement IN3/REV	CM3/REV
R92J *SERIES* (R404A)														
R92J383ABK	220-240/1/50	15650	4585	2330	6.7	2.0	N/A	N/A	N/A	11.8	80	21.8	3.883	63.62
R92J383DBL	200-220/3/50	15626	4572	2350	6.6	1.9	N/A	N/A	N/A	10.6	90	16.6	3.870	63.41
R92J383DBL	200-230/3/60	19254	5641	2780	6.9	2.0	N/A	N/A	N/A	9.5	88	16.5	3.870	63.41
R92J383DBV	380-415/3/50	15626	4578	2352	6.6	1.9	N/A	N/A	N/A	10.6	42	8.5	3.870	63.41
R92J383DBV	380-460/3/60	19250	5640	2770	6.9	2.0	N/A	N/A	N/A	4.7	42	8.5	3.870	63.41
R92J433ABC	208-230/1/60	23500	6885	3278	7.2	2.1	N/A	N/A	N/A	15.5	102	26	4.310	70.62
R92J433ABK	220-240/1/50	19260	5643	2677	7.2	2.1	N/A	N/A	N/A	12.7	80	22	4.310	70.62
R92J433DBL	200-220/3/50	18366	5381	2679	7.0	2.1	N/A	N/A	N/A	11.1	90	16	4.310	70.62
R92J433DBL	200-230/3/60	23978	7025	3268	7.3	2.1	N/A	N/A	N/A	10.2	88	17	4.310	70.62
R92J433DBV	380-415/3/50	18200	5348	2577	7.1	2.1	N/A	N/A	N/A	4.9	42	8	4.310	70.62
R92J433DBV	380-460/3/60	22900	6709	3282	7.0	2.1	N/A	N/A	N/A	5	42	8.2	4.310	70.62
R92J493ABC	208-230-/1/60	26700	7823	3750	7.0	2.1	N/A	N/A	N/A	18.4	130	34	4.710	77.18
R92J493DBL	200-230/3/60	26000	7618	3755	7.0	2.1	N/A	N/A	N/A	10.4	110	16	4.710	77.18

Data Subject to Revision

Model	Oil Charge OZ	Oil Charge L	Weight Net Lbs	Weight Net Kg	Weight Ship Lbs	Weight Ship Kg	ELECTRICAL START COMPONENTS Run Capacitor MFD/VOLTS	Start Capacitor MFD/VOLTS	G.E. Relay	DIMENSIONS A IN	A MM	B IN	B MM	C IN	C MM
R92J383ABK	45	1.2	77.0	34.9	80.0	36.3	50/370	161-193/250	24AV	15.50	393.70	15.80	401.32	16.00	406.40
R92J383DBL	45	1.2	72.0	32.7	75.0	34.0	N/A	N/A	N/A	15.50	393.70	15.80	401.32	16.00	406.40
R92J383DBL	45	1.2	72.0	32.7	75.0	34.0	N/A	N/A	N/A	15.50	393.70	15.80	401.32	16.00	406.40
R92J383DBV	45	1.2	72.0	32.7	75.0	34.0	N/A	N/A	N/A	15.50	393.70	15.80	401.32	16.00	406.40
R92J383DBV	45	1.2	72.0	32.7	75.0	34.0	N/A	N/A	N/A	15.50	393.70	15.80	401.32	16.00	406.40
R92J433ABC	45	1.2	81.0	36.7	84.0	38.1	50/370	216-259/330	3ARR*3S*	15.42	391.67	15.72	399.29	16.00	406.40
R92J433ABK	45	1.2	75.0	34.0	78.0	35.4	50/370	161-193/250	3ARR*3S*	15.42	391.67	15.72	399.29	16.00	406.40
R92J433DBL	45	1.2	79.0	35.8	82.5	37.4	N/A	N/A	N/A	15.50	393.70	15.80	401.32	16.00	406.40
R92J433DBL	45	1.2	79.0	35.8	82.5	37.4	N/A	N/A	N/A	15.50	393.70	15.80	401.32	16.00	406.40
R92J433DBV	45	1.2	79.0	35.8	82.5	37.4	N/A	N/A	N/A	15.50	393.70	15.80	401.32	16.00	406.40
R92J433DBV	45	1.2	79.0	35.8	82.5	37.4	N/A	N/A	N/A	15.50	393.70	15.80	401.32	16.00	406.40
R92J493ABC	45	1.2	87.0	39.5	90.0	40.8	60/370	189-227-330	3S	15.50	393.70	15.80	401.32	16.20	411.48
R92J493DBL	45	1.2	83.5	37.9	86.5	39.2	N/A	N/A	N/A	15.50	393.70	15.80	401.32	16.20	411.48

R404A used in Medium Temp Applications

R92J *SERIES*

Model	Volts Phase Hz	@45/130 Capacity BTU/H	@45/130 Capacity WATTS	@45/130 Motor Input WATTS	@45/130 EER/COP BTU/WH	@45/130 EER/COP W/W	@45/100 Capacity BTU/H	@45/100 Motor Input WATTS	@45/100 EER BTU/WH	Electrical Data RLA	Electrical Data LRA	Electrical Data MCC	Displacement IN3/REV	Displacement CM3/REV
R92J *SERIES* (R407C)														
R92J183ABC	208-230/1/60	17600	5157	1660	10.6	3.1	24800	1360	18.1	7.2	43	13	2.144	35.13
R92J183ABK	220-240/1/50	14300	4190	1380	10.4	3.0	20600	1160	17.7	6.3	37	10.5	2.144	35.13
R92J183DBL	200-220/3/50	15000	4395	1470	10.2	3.0	21100	1240	19.2	6.3	64	11	2.144	35.13
R92J183DBL	200-230/3/60	17900	5245	1340	10.7	3.1	24800	1400	17.7	5.8	63	11.4	2.144	35.13
R92J223ABC	208-230/1/60	20300	5948	1990	10.2	3.0	28500	1630	17.5	7.8	61	15	2.539	41.60
R92J223ABK	220-240/1/50	17800	5215	1690	10.5	3.1	25000	1400	17.9	8	48	13	2.539	41.60
R92J223DBL	200-220/3/50	19200	5626	1800	10.7	3.1	25800	1410	18.3	7	64	14	2.539	41.60
R92J223DBL	200-230/3/60	21400	6270	1990	10.8	3.2	29800	1660	18.0	6.6	63	13.6	2.539	41.60
R92J223DBV	380-415/3/50	18000	5274	1720	10.5	3.1	25300	1420	17.8	3.7	30	6	2.539	41.60
R92J223DBV	380-460/3/60	21100	6182	1980	10.7	3.1	29900	1650	18.1	3.1	30	6	2.539	41.60
R92J253ABC	208-230/1/60	23700	6944	2210	10.7	3.1	32500	1770	18.3	10.6	61	17.3	2.765	45.30
R92J253ABK	220-240/1/50	20800	6094	1870	11.1	3.3	28200	1510	18.7	8.8	64	18.5	2.765	45.30
R92J253DBL	200-220/3/50	20000	5860	1900	10.5	3.1	27500	1560	17.6	7.2	64	12	2.765	45.30
R92J253DBL	200-230/3/60	23800	6973	2180	10.9	3.2	32300	1770	18.2	7	63	13.5	2.765	45.30
R92J253DBV	380-415/3/50	20000	5860	1900	10.5	3.1	27500	1560	17.6	3.5	30	6.1	2.765	45.30
R92J253DBV	380-460/3/60	23800	6973	2180	10.9	3.2	32300	1770	18.2	3.5	30	6.1	2.765	45.30
R92J273ABC	208-230/1/60	25400	7442	2330	10.9	3.2	34400	1810	19.0	10.6	61	18	2.915	47.76
R92J323ABC	208-230/1/60	28500	8351	2670	10.7	3.1	38600	2170	17.7	12.3	82	24.5	3.281	53.76
R92J323DBL	200-220/3/50	20000	5860	1900	10.5	3.1	32300	1770	18.2	8.9	71	16	3.281	53.76
R92J323DBL	200-230/3/60	28800	8438	2730	10.5	3.1	38900	2230	17.5	8.5	78	17	3.281	53.76
R92J343ABC	208-230/1/60	31700	9288	2970	10.7	3.1	41800	2310	18.1	13	78	25.1	3.531	57.85
R92J343DBL	200-220/3/50	26300	7706	2470	10.6	3.1	35200	1940	18.1	9.3	76	16	3.531	57.85
R92J343DBL	200-230/3/60	33300	9757	2970	11.2	3.3	43600	2310	18.9	8.5	72	15	3.531	57.85
R92J343DBV	380-415/3/50	26300	7706	2470	10.6	3.1	35200	1940	18.1	5.1	45	8.3	3.531	57.85
R92J343DBV	380-460/3/60	33300	9757	2970	11.2	3.3	43700	2310	18.9	4.9	45	8	3.531	57.85
R92J383ABC	208-230/1/60	36500	10695	3280	11.1	3.3	47700	2630	18.1	14.6	86	24.5	3.883	63.62
R92J383ABK	220-240/1/50	31500	9230	2810	11.2	3.3	41700	2220	18.8	13.2	80	24.2	3.883	63.62
R92J383DBL	200-220/3/50	30200	8849	2740	11.0	3.2	40100	2160	18.6	11.4	90	17	3.870	63.41
R92J383DBL	200-230/3/60	35200	10314	3180	11.1	3.3	47000	2530	18.6	10.2	88	17.5	3.870	63.41
R92J383DBV	380-415/3/50	30200	8849	2740	11.0	3.2	40100	2160	18.6	5.1	42	9	3.870	63.41
R92J383DBV	380-460/3/60	35300	10343	3180	11.1	3.3	47000	2530	18.6	5	42	8.5	3.870	63.41
R92J433ABC	208-230/1/60	39700	11632	3660	10.8	3.2	51700	2950	17.7	17	102	30	4.310	70.62
R92J433ABK	220-240/1/50	32900	9640	3140	10.5	3.1	43600	2420	18.0	15	80	25	4.310	70.62
R92J433DBL	200-220/3/50	37700	11046	3300	11.4	3.3	43800	2420	18.1	11.6	90	19	4.310	70.62
R92J433DBL	200-230/3/60	40100	11749	3640	10.5	3.1	51500	2930	17.6	11.6	88	18	4.310	70.62
R92J433DBV	380-415/3/50	33100	9698	3130	10.6	3.1	43700	2410	18.1	6	42	8.5	4.310	70.62
R92J433DBV	380-460/3/60	39700	11632	3660	10.8	3.2	51700	2920	17.7	5.5	42	9	4.310	70.62

Data Subject to Revision

R407C used in High Temp Applications

Model	Oil Charge OZ	Oil Charge L	Weight Net Lbs	Weight Net Kg	Weight Ship Lbs	Weight Ship Kg	ELECTRICAL START COMPONENTS Run Capacitor MFD/VOLTS	ELECTRICAL START COMPONENTS Start Capacitor MFD/VOLTS	ELECTRICAL START COMPONENTS G.E. Relay	DIMENSIONS A IN	DIMENSIONS A MM	DIMENSIONS B IN	DIMENSIONS B MM	DIMENSIONS C IN	DIMENSIONS C MM
R92J183ABC	35	1.0	58.5	26.5	62.0	28.1	35/370	145-175/330	3AAR3*3T*	11.70	297.18	13.70	347.98	14.00	355.60
R92J183ABK	35	1.0	59.0	26.8	61.0	27.7	35/370	145-175/330	24AV	11.70	297.18	13.70	347.98	14.00	355.60
R92J183DBL	35	1.0	62.5	28.3	66.0	29.9	N/A	N/A	N/A	11.70	297.18	13.70	347.98	14.00	355.60
R92J183DBL	35	1.0	62.5	28.3	66.0	29.9	N/A	N/A	N/A	11.70	297.18	13.70	347.98	14.00	355.60
R92J223ABC	35	1.0	59.0	26.8	63.5	28.8	30/370	145-175/330	3ARR*3N*	13.50	342.90	13.70	347.98	14.00	355.60
R92J223ABK	35	1.0	61.0	27.7	64.0	29.0	35/370	145-175/250	3ARR3*3AP*	13.50	342.90	13.70	347.98	14.00	355.60
R92J223DBL	35	1.0	59.0	26.8	63.0	28.6	N/A	N/A	N/A	13.50	342.90	13.70	347.98	14.00	355.60
R92J223DBL	35	1.0	59.0	26.8	63.0	28.6	N/A	N/A	N/A	13.50	342.90	13.70	347.98	14.00	355.60
R92J223DBV	35	1.0	71.0	32.2	74.0	33.6	N/A	N/A	N/A	13.50	342.90	13.70	347.98	14.00	355.60
R92J223DBV	35	1.0	71.0	32.2	74.0	33.6	N/A	N/A	N/A	13.50	342.90	13.70	347.98	14.00	355.60
R92J253ABC	45	1.2	77.0	34.9	80.0	36.3	30/370	145-175/250	3ARR3-3S	14.95	379.73	15.25	387.35	15.53	394.46
R92J253ABK	45	1.2	73.0	33.1	76.0	34.5	45/370	161-193/250	3ARR3*3AM*	15.20	386.08	15.50	393.70	15.78	400.81
R92J253DBL	45	1.2	71.0	32.2	75.0	34.0	N/A	N/A	N/A	14.40	365.76	14.70	373.38	15.00	381.00
R92J253DBL	45	1.2	71.0	32.2	75.0	34.0	N/A	N/A	N/A	14.40	365.76	14.70	373.38	15.00	381.00
R92J253DBV	45	1.2	71.0	32.2	75.0	34.0	N/A	N/A	N/A	14.95	379.73	15.25	387.35	15.53	394.46
R92J253DBV	45	1.2	71.0	32.2	75.0	34.0	N/A	N/A	N/A	14.95	379.73	15.25	387.35	15.53	394.46
R92J273ABC	45	1.2	72.0	32.7	75.0	34.0	30/370	145-175/330	3ARR3*3S*	14.92	378.97	15.25	387.35	15.53	394.46
R92J323ABC	35	1.0	68.5	31.1	72.0	32.7	40/370	145-175/250	3ARR3*3P*	14.00	355.60	14.20	360.68	14.50	368.30
R92J323DBL	35	1.0	67.5	30.6	71.0	32.2	N/A	N/A	N/A	14.00	355.60	14.20	360.68	14.50	368.30
R92J323DBL	35	1.0	67.5	30.6	71.0	32.2	N/A	N/A	N/A	14.00	355.60	14.20	360.68	14.50	368.30
R92J343ABC	45	1.2	76.0	34.5	79.0	35.8	45/370	189-227/250	3ARR*3S*	15.17	385.32	15.50	393.70	15.78	400.81
R92J343DBL	45	1.2	71.0	32.2	74.0	33.6	N/A	N/A	N/A	15.17	385.32	15.50	393.70	15.78	400.81
R92J343DBL	45	1.2	71.0	32.2	74.0	33.6	N/A	N/A	N/A	15.17	385.32	15.50	393.70	15.78	400.81
R92J343DBV	45	1.2	71.5	32.4	74.5	33.8	N/A	N/A	N/A	15.20	386.08	15.50	393.70	15.80	401.32
R92J343DBV	45	1.2	71.5	32.4	74.5	33.8	N/A	N/A	N/A	15.20	386.08	15.50	393.70	15.80	401.32
R92J383ABC	45	1.2	77.0	34.9	80.0	36.3	45/370	189-227/250	3ARR3*3S*	15.50	393.70	15.80	401.32	16.00	406.40
R92J383ABK	45	1.2	77.0	34.9	80.0	36.3	50/370	161-193/250	3ARR*3AN*	15.50	393.70	15.80	401.32	16.00	406.40
R92J383DBL	45	1.2	72.0	32.7	75.0	34.0	N/A	N/A	N/A	15.50	393.70	15.80	401.32	16.00	406.40
R92J383DBL	45	1.2	72.0	32.7	75.0	34.0	N/A	N/A	N/A	15.50	393.70	15.80	401.32	16.00	406.40
R92J383DBV	45	1.2	72.0	32.7	75.0	34.0	N/A	N/A	N/A	15.50	393.70	15.80	401.32	16.00	406.40
R92J383DBV	45	1.2	72.0	32.7	75.0	34.0	N/A	N/A	N/A	15.50	393.70	15.80	401.32	16.00	406.40
R92J433ABC	45	1.2	81.0	36.7	84.0	38.1	50/370	216-259/330	3ARR3*3S*	15.42	391.67	15.72	399.29	16.00	406.40
R92J433ABK	45	1.2	75.0	34.0	78.0	35.4	50/370	161-193/250	3ARR3*3S*	15.42	391.67	15.72	399.29	16.00	406.40
R92J433DBL	45	1.2	79.0	35.8	82.5	37.4	N/A	N/A	N/A	15.50	393.70	15.80	401.32	16.00	406.40
R92J433DBL	45	1.2	79.0	35.8	82.5	37.4	N/A	N/A	N/A	15.50	393.70	15.80	401.32	16.00	406.40
R92J433DBV	45	1.2	79.0	35.8	82.5	37.4	N/A	N/A	N/A	15.50	393.70	15.80	401.32	16.00	406.40
R92J433DBV	45	1.2	79.0	35.8	82.5	37.4	N/A	N/A	N/A	15.50	393.70	15.80	401.32	16.00	406.40

PLEASE NOTE:

MODELS LISTED ON THE FOLLOWING PAGES HAVE BEEN MADE OBSOLETE BY BRISTOL COMPRESSORS.

ALL TECHNICAL DATA CAN BE FOUND @ WWW.BRISTOLCOMPRESSORS.COM

Obsolete Models

H20B133ABC	H20C403ABK	H20R683DBF	H21R543DBY	H23B18SABC	H23B243DBE	H23B30QABC	H23C403DBE	H23R753DBD	H24B22QABJ
H20B153ABC	H20C403DBE	H20R683DBY	H21R583ABC	H23B18SABH	H23B24QABC	H23B30QABJ	H23C403DBF	H23R753DBD	H24B243ABJ
H20B153ABH	H20C403DBE	H20R723ABC	H21R583CBC	H23B18SABH	H23B24QABJ	H23B30QABK	H23C423ABC	H23R753DBE	H24B243ABK
H20B153ABH	H20C403DBY	H20R723DBE	H21R583DBE	H23B193ABC	H23B24QABK	H23B30QDBD	H23C423DBD	H23R753DBE	H24B24QABC
H20B153ABJ	H20C423ABC	H20R723DBE	H21R583DBE	H23B193ABK	H23B24QDBD	H23B30QDBD	H23C423DBD	H23R813ABC	H24B24QABH
H20B173ABC	H20C423DBE	H20R723DBF	H21R583DBF	H23B19QABC	H23B24QDBD	H23B30QDBE	H23C423DBE	H23R813DBE	H24B24QABH
H20B173ABH	H20C423DBF	H20R723DBX	H21R583DBY	H23B19QABJ	H23B24QDBE	H23B30QDBE	H23C423DBE	H23R813DBE	H24B24QABJ
H20B173ABH	H20C423DBX	H20R723DBY	H21R603ABC	H23B19QABK	H23B24QDBE	H23B30SABC	H23C423DBF	H24A383ABC	H24B26QABC
H20B173ABJ	H20C423DBY	H20R753ABC	H21R603CBC	H23B203ABC	H23B24SABC	H23B30SABH	H23C453ABC	H24A383ABK	H24B26QABH
H20B193ABH	H20D943DBE	H20R753DBE	H21R603DBE	H23B203ABK	H23B24SABH	H23B30SABH	H23C453ABK	H24A383DBE	H24B26QABH
H20B193ABJ	H20D943DBE	H20R753DBE	H21R603DBE	H23B203DBD	H23B24SABH	H23B323ABC	H23C453DBD	H24A383DBE	H24B283ABK
H20B193ABK	H20D943DBF	H20R753DBX	H22R583ABC	H23B203DBD	H23B263ABC	H23B323ABJ	H23C453DBD	H24A383DBF	H24B28QABC
H20B203ABC	H20D943DBL	H20R783DBE	H22R603ABC	H23B203DBE	H23B263ABK	H23B323ABK	H23C453DBE	H24A383DBF	H24B28QABH
H20B203ABK	H20D943DBL	H20R783DBE	H23A263ABC	H23B203DBE	H23B263DBD	H23B323DBD	H23C453DBE	H24A383DBL	H24B28QABH
H20B213ABC	H20J253DBL	H20R813ABC	H23A263ABH	H23B20QABC	H23B263DBD	H23B323DBD	H23C453DBF	H24A383DBL	H24B28QABJ
H20B223ABC	H20J253DBL	H20R813DBE	H23A263ABH	H23B20QABK	H23B263DBE	H23B323DBE	H23C473ABC	H24A423ABC	H24B29QABC
H20B223ABH	H20J253DBV	H20R813DBE	H23A263ABJ	H23B20QDBD	H23B263DBE	H23B323DBE	H23C473ABK	H24A423ABK	H24B29QABK
H20B223ABH	H20J253DBV	H20R813DBF	H23A263DBE	H23B20QDBD	H23B26QABC	H23B32QABC	H23C473DBD	H24A423DBE	H24B31QABC
H20B223ABJ	H20R104DBE	H20R813DBL	H23A263DBE	H23B20QDBE	H23B26QABK	H23B32QABJ	H23C473DBD	H24A423DBE	H24B31QABJ
H20B243ABC	H20R104DBE	H20R813DBL	H23A263DBL	H23B20QDBE	H23B26QDBD	H23B32QABK	H23C473DBE	H24A423DBF	H24B31QABK
H20B243ABH	H20R124DBE	H20R943DBE	H23A263DBL	H23B20SABC	H23B26QDBD	H23B32QDBD	H23C473DBE	H24A423DBF	H25A32QCBC
H20B243ABH	H20R124DBE	H20R943DBE	H23A283ABC	H23B20SABH	H23B26QDBE	H23B32QDBD	H23C473DBF	H24A423DBL	H25A32QDBE
H20B243ABJ	H20R124DBY	H20R943DBF	H23A283ABK	H23B20SABH	H23B26QDBE	H23B32QDBE	H23R483ABC	H24A423DBL	H25A32QDBE
H20B263ABC	H20R453ABC	H20R943DBL	H23A323ABC	H23B213ABJ	H23B26SABC	H23B32QDBE	H23R513ABC	H24A583CBC	H25A32QDBF
H20B263ABH	H20R453ABK	H20R943DBL	H23A323ABH	H23B21QABJ	H23B26SABH	H23B32SABC	H23R513DBD	H24A583DBE	H25A32QDBF
H20B263ABH	H20R453DBE	H21C263ABC	H23A323ABH	H23B223ABC	H23B26SABH	H23B33SABC	H23R513DBD	H24A583DBE	H25A32QDBL
H20B283ABC	H20R453DBE	H21C293ABC	H23A323DBE	H23B223ABH	H23B283ABC	H23B33SABH	H23R513DBE	H24A583DBL	H25A32QDBL
H20B283ABH	H20R453DBX	H21C343ABC	H23A323DBE	H23B223ABH	H23B283ABH	H23B33SABH	H23R513DBE	H24A583DBL	H25A35QCBC
H20B283ABH	H20R453DBY	H21C343DBE	H23A323DBL	H23B223ABJ	H23B283ABJ	H23B353ABK	H23R543ABC	H24B13QABC	H25A35QDBE
H20B283ABJ	H20R483ABC	H21C343DBE	H23A323DBL	H23B223DBD	H23B283DBD	H23B353DBE	H23R543DBD	H24B15QABC	H25A35QDBE
H20B293ABC	H20R483DBE	H21C343DBY	H23B153ABC	H23B223DBD	H23B283DBD	H23B353DBE	H23R543DBD	H24B15QABH	H25A35QDBF
H20B293ABK	H20R483DBE	H21C383ABC	H23B153ABH	H23B223DBE	H23B283DBE	H23B35QABK	H23R543DBE	H24B15QABH	H25A35QDBF
H20B313ABC	H20R483DBY	H21C403ABC	H23B153ABH	H23B223DBE	H23B283DBE	H23B35QDBD	H23R543DBE	H24B15QABJ	H25A35QDBL
H20B313ABJ	H20R583ABC	H21C423ABC	H23B153ABJ	H23B22QABC	H23B28QABC	H23B35QDBD	H23R543DBF	H24B17QABC	H25A35QDBL
H20B313ABK	H20R583ABK	H21C423DBE	H23B15QABC	H23B22QABH	H23B28QABH	H23B35QDBE	H23R583ABC	H24B17QABH	H25A38QCBC
H20C233ABC	H20R583DBE	H21C423DBE	H23B15QABH	H23B22QABH	H23B28QABH	H23B35QDBE	H23R583ABK	H24B17QABH	H25A38QDBE
H20C303ABC	H20R583DBE	H21C423DBF	H23B15QABH	H23B22QABJ	H23B28QABJ	H23B35SABC	H23R583DBD	H24B17QABJ	H25A38QDBE
H20C343ABC	H20R583DBF	H21C423DBY	H23B15QABJ	H23B22QDBD	H23B28QDBD	H23C323ABC	H23R583DBD	H24B17QDBL	H25A38QDBF
H20C343ABK	H20R583DBX	H21R453ABC	H23B16SABC	H23B22QDBD	H23B28QDBD	H23C343ABC	H23R583DBE	H24B17QDBL	H25A38QDBF
H20C343DBE	H20R583DBY	H21R453DBE	H23B173ABC	H23B22QDBE	H23B28QDBE	H23C383ABC	H23R583DBE	H24B183ABK	H25A38QDBL
H20C343DBE	H20R603ABC	H21R453DBE	H23B173ABH	H23B22QDBE	H23B28QDBE	H23C383ABK	H23R583DBF	H24B19QABC	H25A38QDBL
H20C343DBY	H20R603ABK	H21R453DBY	H23B173ABH	H23B22SABC	H23B28SABC	H23C383DBD	H23R603ABC	H24B19QABH	H25A42QCBC
H20C373ABC	H20R603DBE	H21R483ABC	H23B173ABJ	H23B22SABH	H23B28SABH	H23C383DBD	H23R603ABK	H24B19QABJ	H25A42QDBE
H20C373ABK	H20R603DBE	H21R483CBC	H23B17QABC	H23B22SABH	H23B28SABH	H23C383DBE	H23R603DBD	H24B19QABK	H25A42QDBE
H20C373DBE	H20R603DBF	H21R483DBE	H23B17QABH	H23B243ABC	H23B303ABC	H23C383DBE	H23R603DBD	H24B20QABC	H25A42QDBF
H20C373DBE	H20R603DBX	H21R483DBE	H23B17QABH	H23B243ABJ	H23B303ABK	H23C383DBF	H23R603DBE	H24B20QABK	H25A42QDBF
H20C373DBF	H20R603DBY	H21R483DBY	H23B17QABJ	H23B243ABK	H23B303DBD	H23C403ABC	H23R603DBE	H24B21QABC	H25A42QDBL
H20C373DBX	H20R683ABC	H21R513DBY	H23B17SABC	H23B243DBD	H23B303DBD	H23C403DBD	H23R603DBF	H24B22QABC	H25A42QDBL
H20C373DBY	H20R683DBE	H21R543ABC	H23B17SABH	H23B243DBD	H23B303DBE	H23C403DBD	H23R683ABC	H24B22QABH	H25A46QCBC
H20C403ABC	H20R683DBE	H21R543DBE	H23B17SABH	H23B243DBE	H23B303DBE	H23C403DBE	H23R723ABC	H24B22QABH	H25A46QDBE

Obsolete Models

H25A46QDBE	H25B24QABH	H25D11QDBE	H25G184DPF	H26A46QDBL	H26D36QBBC	H27B20QCBC	H2NG104DRE	H73A303DBE	H73R813DBE
H25A46QDBF	H25B24QDBE	H25D11QDBE	H25G204DPD	H26A50QCBC	H26D413BBH	H27B22QCBC	H2NG104DRE	H73A303DBL	H75G204DPV
H25A46QDBF	H25B24QDBE	H25D11QDBF	H25G204DPD	H26A50QDBE	H26D413BBH	H27B24QCBC	H2NG104DRF	H73A323ABH	H75G204DPV
H25A46QDBL	H25B24QDBL	H25D11QDBF	H25G204DPE	H26A50QDBE	H26D44QBBC	H27B26QCBC	H2NG124DPD	H73A323DBE	H75G244DPV
H25A46QDBL	H25B24QDBL	H25D11QDBL	H25G204DPE	H26A50QDBF	H26D493BBH	H27B28QCBC	H2NG124DPD	H73A323DBL	H75G244DPV
H25A50QCBC	H25B26QABC	H25D11QDBL	H25G204DPF	H26A50QDBF	H26D493BBH	H27B30QCBC	H2NG124DPE	H73B17QABC	H75G294DPV
H25A50QDBE	H25B26QABH	H25D12QDBE	H25G244DPD	H26A50QDBL	H26D56QBBC	H27B32QCBC	H2NG124DPE	H73B17QABH	H75G294DPV
H25A50QDBE	H25B26QABH	H25D12QDBE	H25G244DPD	H26A50QDBL	H26D573BBH	H27B35QCBC	H2NG124DPF	H73B19QABK	H78A383DBF
H25A50QDBF	H25B28QABC	H25D12QDBF	H25G244DPE	H26A54QCBC	H26D573BBH	H29A323CBC	H2NG144DPD	H73B20QABK	H78A383DBF
H25A50QDBF	H25B28QABH	H25D12QDBF	H25G244DPE	H26A54QDBE	H26D673BBH	H29A323DBF	H2NG144DPD	H73B20QDBE	H78A383DBL
H25A50QDBL	H25B28QABH	H25D12QDBL	H25G244DPF	H26A54QDBE	H26D673BBH	H29A323DBF	H2NG144DPE	H73B22QABC	H78A383DBL
H25A50QDBL	H25B28QDBE	H25D12QDBL	H25G294DPD	H26A54QDBF	H27A32QCBC	H29A323DBL	H2NG144DPE	H73B22QABH	H78A383DBV
H25A54QCBC	H25B28QDBE	H25D14QDBE	H25G294DPD	H26A54QDBF	H27A32QDBE	H29A323DBL	H2NG144DPF	H73B22QDBE	H78A383DBV
H25A54QDBE	H25B28QDBL	H25D14QDBE	H25G294DPE	H26A54QDBL	H27A32QDBF	H29A323DBV	H70C233DBE	H73B24QABK	H78A423ABK
H25A54QDBE	H25B28QDBL	H25D14QDBF	H25G294DPE	H26A54QDBL	H27A32QDBL	H29A323DBV	H70C343ABK	H73B24QDBE	H78A423DBF
H25A54QDBF	H25B30QABC	H25D14QDBF	H25G294DPF	H26A56QCBC	H27A35QCBC	H29A353CBC	H70C343DBE	H73B26QABK	H78A423DBF
H25A54QDBF	H25B30QABH	H25D14QDBL	H26A32QCBC	H26A56QDBE	H27A35QDBE	H29A353DBF	H70C373ABK	H73B28QABH	H78A423DBL
H25A54QDBL	H25B30QABH	H25D14QDBL	H26A32QDBE	H26A56QDBE	H27A35QDBF	H29A353DBF	H70C373DBE	H73B28QDBE	H78A423DBL
H25A54QDBL	H25B30QDBE	H25D76QDBE	H26A32QDBE	H26A56QDBF	H27A35QDBL	H29A353DBL	H70C403ABK	H73B30QABK	H78A423DBV
H25A56QCBC	H25B30QDBE	H25D76QDBE	H26A32QDBF	H26A56QDBF	H27A38QCBC	H29A353DBV	H70C403DBE	H73B30QDBD	H78A423DBV
H25A56QDBE	H25B30QDBL	H25D76QDBF	H26A32QDBF	H26A56QDBL	H27A38QDBE	H29A353DBV	H70C423DBE	H73B30QDBE	H78A473DBV
H25A56QDBE	H25B30QDBL	H25D76QDBF	H26A32QDBL	H26A56QDBL	H27A38QDBF	H29A403CBC	H70C423DBE	H73B32QABK	H78A473DBV
H25A56QDBF	H25B32QABC	H25D76QDBL	H26A32QDBL	H26A62QCBC	H27A38QDBL	H29B22UCBC	H70D104DBE	H73B32QDBE	H78A543DBF
H25A56QDBF	H25B32QABH	H25D76QDBL	H26A35QCBC	H26A62QDBE	H27A42QCBC	H29B24UDBE	H70D124DBE	H73B35QABK	H78A543DBF
H25A56QDBL	H25B32QABH	H25D84QDBE	H26A35QDBE	H26A62QDBE	H27A42QDBE	H29B24UDBE	H70D943DBE	H73B35QDBE	H78A543DBL
H25A56QDBL	H25B32QDBE	H25D84QDBE	H26A35QDBE	H26A62QDBF	H27A42QDBF	H29B26UABK	H70D943DBE	H73C383DBE	H78A543DBL
H25A62QCBC	H25B32QDBE	H25D84QDBF	H26A35QDBF	H26A62QDBF	H27A42QDBL	H29B26UDBE	H70D943DBL	H73C403DBD	H78A543DBV
H25A62QDBE	H25B32QDBL	H25D84QDBF	H26A35QDBF	H26A62QDBL	H27A46QCBC	H29B26UDBE	H70D943DBL	H73C403DBE	H78A543DBV
H25A62QDBE	H25B32QDBL	H25D84QDBL	H26A35QDBL	H26A62QDBL	H27A46QDBE	H29B28UABK	H70R104DBE	H73C423DBD	H79B22UDBE
H25A62QDBF	H25B33EABC	H25D84QDBL	H26A35QDBL	H26A68QDBE	H27A46QDBF	H29B28UDBE	H70R124DBE	H73C423DBE	H79B24UABK
H25A62QDBF	H25B33EDBE	H25D92QDBE	H26A38QCBC	H26A68QDBE	H27A46QDBL	H29B28UDBE	H70R453ABK	H73C453ABK	H79B24UDBE
H25A62QDBL	H25B33EDBE	H25D92QDBE	H26A38QDBE	H26A68QDBF	H27A50QCBC	H29B30UABK	H70R453DBE	H73C453DBD	H79B26UABK
H25A62QDBL	H25B33EDBL	H25D92QDBF	H26A38QDBE	H26A68QDBF	H27A50QDBE	H29B30UDBE	H70R483DBE	H73C453DBE	H79B26UDBE
H25B15QABC	H25B33EDBL	H25D92QDBF	H26A38QDBF	H26A68QDBL	H27A50QDBF	H29B30UDBE	H70R583ABK	H73C473ABK	H79B28UABK
H25B17QABC	H25B34EABC	H25D92QDBL	H26A38QDBF	H26A68QDBL	H27A50QDBL	H29B32UABK	H70R583DBE	H73C473DBD	H79B28UDBE
H25B17QABH	H25B35QABC	H25D92QDBL	H26A38QDBL	H26A72QDBE	H27A54QCBC	H29B32UDBE	H70R603ABK	H73C473DBE	H79B30UABK
H25B17QABH	H25B35QABH	H25D99QDBE	H26A38QDBL	H26A72QDBE	H27A54QDBE	H29B32UDBE	H70R603DBE	H73D543DBE	H79B30UDBE
H25B18QABC	H25B35QABH	H25D99QDBE	H26A42QCBC	H26A72QDBF	H27A54QDBF	H29B33UABK	H70R683DBE	H73D583DBE	H79B32UABK
H25B18QABH	H25B35QDBE	H25D99QDBF	H26A42QDBE	H26A72QDBF	H27A54QDBL	H29B33UDBE	H70R723DBE	H73R483DBV	H79B32UDBE
H25B18QABH	H25B35QDBE	H25D99QDBF	H26A42QDBE	H26A72QDBL	H27A56QCBC	H29B33UDBE	H70R753DBE	H73R513ABC	H79B33UABK
H25B20QABC	H25B35QDBF	H25D99QDBL	H26A42QDBF	H26A72QDBL	H27A56QDBE	H29B35UABK	H70R813DBE	H73R513DBD	H79B33UDBE
H25B22QABC	H25B35QDBF	H25D99QDBL	H26A42QDBF	H26B15QCBC	H27A56QDBF	H29B35UDBE	H70R813DBL	H73R513DBE	H79B35UABK
H25B22QABH	H25B35QDBL	H25G094DBF	H26A42QDBL	H26B17QCBC	H27A56QDBL	H29B35UDBE	H70R943DBE	H73R543DBE	H79B35UDBE
H25B22QABH	H25B35QDBL	H25G104DBF	H26A42QDBL	H26B18QCBC	H27A62QCBC	H2NG094DPD	H70R943DBL	H73R543DBV	H80J183ABC
H25B22QDBE	H25D10QDBE	H25G124DBF	H26A46QCBC	H26B20QCBC	H27A62QDBE	H2NG094DPD	H71J193ABH	H73R583ABK	H80J223ABC
H25B22QDBE	H25D10QDBE	H25G144DBF	H26A46QDBE	H26B22QCBC	H27A62QDBF	H2NG094DPE	H73A263ABH	H73R583DBE	H80J293ABC
H25B22QDBL	H25D10QDBF	H25G184DPD	H26A46QDBE	H26B24QCBC	H27A62QDBL	H2NG094DPE	H73A263DBE	H73R603ABK	H80J323ABC
H25B22QDBL	H25D10QDBF	H25G184DPD	H26A46QDBF	H26B26QCBC	H27B15QCBC	H2NG094DPF	H73A263DBL	H73R603DBE	H80J383ABC
H25B24QABC	H25D10QDBL	H25G184DPE	H26A46QDBF	H26B28QCBC	H27B17QCBC	H2NG104DRD	H73A283ABK	H73R723DBE	H81J283DBL
H25B24QABH	H25D10QDBL	H25G184DPE	H26A46QDBL	H26B30QCBC	H27B18QCBC	H2NG104DRD	H73A303ABH	H73R753DBE	H81J283DBL

Obsolete Models

H81J28BABC	H83R513ABC	H89B183DBV							
H81J28BDBL	H83R513DBD	H89B193ABC							
H81J28BDBL	H83R513DBD	H89B193ABH							
H81J313ABC	H83R513DBE	H89B193ABH							
H81J31BABC	H83R513DBE	H89B19BABC							
H81J383ABC	H83R513DBF	H89B203DBV							
H81J38BABC	H83R543ABC	H89B203DBV							
H83C313ABC	H83R543ABK	H89B223ABH							
H83C313DBD	H83R543DBD	H89B223ABH							
H83C313DBD	H83R543DBD	H89B243ABC							
H83C323ABC	H83R543DBE	H89B243DBL							
H83C323DBD	H83R543DBE	H89B243DBL							
H83C323DBD	H83R543DBF	H89B243DBV							
H83C323DBE	H83R563ABC	H89B243DBV							
H83C323DBE	H83R563ABK	H89B283ABC							
H83C323DBF	H83R563DBD	H89B283ABH							
H83C363ABC	H83R563DBD	H89B283ABH							
H83C363DBD	H83R563DBE	H89B283DBL							
H83C363DBD	H83R563DBE	H89B283DBL							
H83C363DBE	H83R563DBF	H89B283DBV							
H83C363DBE	H83R683DBF	H89B283DBV							
H83C363DBF	H83R683DBL	H89B293ABH							
H83C383ABC	H83R683DBL	H89B293ABH							
H83C383ABK	H83R683DBV	H89B303ABC							
H83C383DBD	H83R683DBV	H89B303DBV							
H83C383DBD	H89A423CBC	H89B303DBV							
H83C383DBE	H89A423DBL	H89B323ABC							
H83C383DBE	H89A423DBL	H89B323ABH							
H83C383DBF	H89A423DBV	H89B323ABH							
H83C413ABC	H89A423DBV	H89B343ABC							
H83C413DBD	H89A513CBC	H89B343ABH							
H83C413DBD	H89A543CBC	H89B343ABH							
H83C413DBE	H89A583DBL	H89B343DBL							
H83C413DBE	H89A583DBL	H89B343DBL							
H83R413ABC	H89A623CBC	H89B343DBV							
H83R413DBD	H89A723DBV	H89B343DBV							
H83R413DBD	H89A723DBV	H89B363DBV							
H83R413DBF	H89B133ABC								
H83R413DBV	H89B13BABC								
H83R413DBV	H89B153ABC								
H83R443ABC	H89B153ABH								
H83R443DBD	H89B153ABH								
H83R443DBD	H89B15BABC								
H83R443DBF	H89B163ABC								
H83R443DBV	H89B16BABC								
H83R493ABC	H89B183ABH								
H83R493DBD	H89B183ABH								
H83R493DBD	H89B183DBL								
H83R493DBE	H89B183DBL								
H83R493DBE	H89B183DBV								

Obsolete Models

Bristol Compressors International Inc.

Product Marketing Bulletin

Subject: *KICKSTART* aftermarket start assist

KICKSTART start assist is acceptable for use as a field installed start assist for Bristol Compressors products. The user **must verify** that the start capacitor included in the integrated start kit package **has the proper voltage rating** as listed below.

Capacitors rated 330 volts may be used where 250 volts is specified. All KS8 and TO-5 kits made after September 2006 are rated for 330 volts.

The kit has only **2 wires** for installation in parallel with the system run capacitor.

For maximum service life, Bristol Compressors recommends the specified 3-wire start capacitor and relay combination noted on each individual compressor model specification sheet.

KICKSTART (60 Hz)	Start Capacitor (Type II)	Bristol Model (230/208V- 60Hz)
KS8 (250 volts)	108-130 µFd/250V	H*3B, H*4B, H2*C H20J 15 thru 25 H21J 14 thru 25
KS8 (330 volts)	108-130 µFd/330V	H2EB 153 thru 223
TO-5 (250 volts)	189-227 µFd/250V	H*3A, H*4A,H*3B H*4B, H*5B, H*6B H7*B H29B H20J 27, 29

KICKSTART (60 Hz)	Start Capacitor (Type II)	Bristol Model (230/208V- 60Hz)
TO-5 (330 volts)	189-227 µFd/330V	H2*J 27 thru 38 H80J 18 thru 22 H81J 18 thru 22 H82J **EXCEPT** 42 thru 46 H2EB 263 thru 323 H2EB 18S thru 32S
KS1	270-324 µFd/330V	H*5A, H*6A, H*7A H*8A, H*9A, H89B H2*J 40 thru 44 H80J 29 thru 38 H81J 28 thru 38 H82J42 thru 46

(TO-5 may be substituted for KS8)

For TS (Twin Single) products, please refer to individual compressor model specification

Use of any other start components or devices is not recommended and will void any warranty claims.